YAMAHA

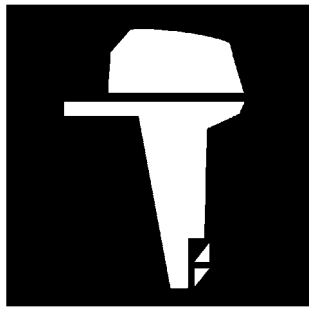

PARTS CATALOGUE
CATÁLOGO DE PEÇAS

F20BMH'15 (6BY9)

1P6BY-280P1

( )

YAMAHA GENUINE Parts & Accessories

F20BMH
PARTS CATALOGUE
©2015 by Yamaha Motor Co., Ltd.
1st edition, July 2015
All rights reserved.
Any reprinting or unauthorized use
without the written permission of
Yamaha Motor Co., Ltd.
is expressly prohibited.

F20BMH
CATÁLOGO DE PEÇAS
©2015, Yamaha Motor Co., Ltd.
1ª edição, Julho 2015
Todos os direitos reservados.
É proibida expressamente toda e qualquer
reimpressão ou utilização sem a autorização
por escrita da
Yamaha Motor Co., Ltd.

FOREWORD

This Parts Catalogue is related to the parts for the model(s) on the cover page. When you are ordering replacement parts, please refer to this Parts Catalogue and quote both part numbers and part names correctly.

1. Modifications or additions which have been made after the issue of the Parts Catalogue will be announced in the Parts News.
   It is advisable that you make the necessary corrections to the Parts Catalogue according to the Parts News.

2. Abbreviations
   The following abbreviations are used in this Parts Catalogue.

   "UR" Use specified parts number.
   "UN" Use as many as needed.
   "AP" Alternate Parts
   "LM" Locally Made (Parts need to be ordered locally)
   "F#" Frame No. (Applicable machine No.)
   "O/S" Over Size

3. The number of components for assembly
   - Parts, which are to be supplied in an assembly, are listed with a dot (.) in front of the part name as shown below.
   - The numeral appearing to the right of each component part indicates the quantity of parts for each assembly unit.

PART NO.	DESCRIPTION	Q'TY	REMARKS
2F5–83310–60	FRONT FLASHER LIGHT ASSY	2	
115–83311–60	.BULB (6V–18W)	1	

4. Applicable colours of graphics are represented in the "REMARKS" as shown below.

PART NO.	DESCRIPTION	Q'TY	REMARKS
2N4–24110–00–X5	FUEL TANK COMP.	2	MXR
3J1–24240–10	.GRAPHIC, FUEL TANK	1	FOR MXR

5. Note that the illustrations for reference in finding parts numbers are not to be used for assembling. When assembling, please use the applicable service manual.

6. The asterisk (*) before a reference number indicates modified items after the first edition.

7. Applicable Serial No.

   Engine Serial No.

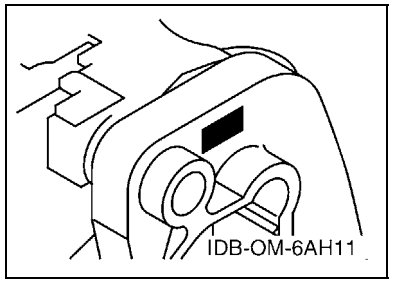

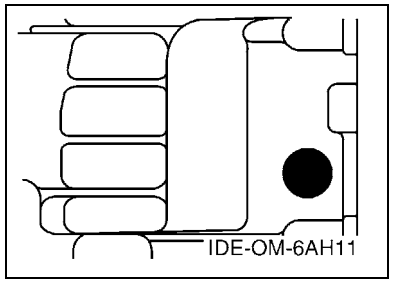

8. Applicable Engine Starting Serial No.

Model	Serial No.	Model	Serial No.

9. Applicable Colour Code

Abbreviation	Colour Name	Colour Code
DBNM2	DARK BLUISH GRAY METALLIC 2	004D

10. Quantity Column Information

Column No.	Name Of Q'ty Column	Applicable Model
1	6BY9	F20BMH

PREFÁCIO

Este Catálogo de Peças se refere as Peças dos modelos relacionados na capa. Quando for solicitar peças de reposição para estes Modelos, recorra a este Catálogo de Peças e especifique corretamente os códigos e Nomes das Peças.

1. As Modificações ou adições que tenham sido efetuadas após a publicação deste Catálogo de Peças, serão comunicadas a Rede de Concessionárias através das informações de Modificação de Peças (Parts News).

2. Abreviaturas
   Seguem abaixo as abreviaturas utilizadas neste Catálogo de Peças:

   "UR" Uso Restrito para o Código da Peça
   "UN" Uso Necessário
   "AP" Peça Alternativa
   "LM" Fabricação Local (A peça pode ser pedida localmente)
   "F#" No. de Série do Chassi (Aplicação do Número de Série)
   "O/S" Tamanho Maior

3. Peças componentes de conjuntos
   - As peças que são fornecidas dentro de conjuntos estão listadas com um ponto de identificação (.)como segue abaixo.
   - O número que aparece a direita da descrição da Peça indica o número de Peças usado em cada Conjunto Individual.

No. PEÇA	DESCRIÇÃO	QTDE	OBSERVAÇÕES
2F5–83310–60	PISCA DIANTEIRO CONJ.	2	
115–83311–60	.LÂMPADA (6V–18W)	1	

4. Os gráficos que são Aplicados em Peças Coloridas estão representados na coluna "OBSERVAÇÕES", como segue abaixo.

No. PEÇA	DESCRIÇÃO	QTDE	OBSERVAÇÕES
2N4–24110–00–X5	TANQUE DE COMBUSTÍVEL COMPL.	2	MXR
3J1–24240–10	.GRÁFICO, TANQUE DE COMB.	1	PARA MXR

5. Observe que as ilustrações são referentes apenas a indicação dos códigos das peças, e não para montagem. Para montagem, por favor utilize o Manual de Montagem apropriado.

6. O asterisco (*) antes do Número de referência da peça indica a modificação ocorrida após a primeira edição.

7. Aplicação do Número de Série

   No. de Série do Motor

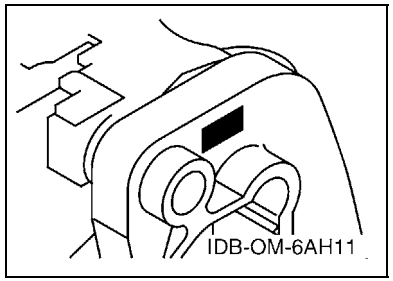

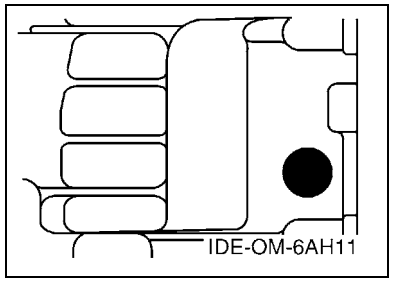

8. Aplicação do No. de Série Inicial

Modelo	No. Série	Modelo	No. Série

9. Aplicação do Código de Cor

Abreviação	Nome da Cor	Código da Cor
DBNM2	DARK BLUISH GRAY METALLIC 2	004D

10. Informação na Coluna de Quantidade

No. da Coluna	Nome na Coluna de Qtde	Modelo Aplicável
1	6BY9	F20BMH

CONTENTS

SCHEDULED SERVICE PARTS 1
TOP COWLING 2
CYLINDER & CRANKCASE 1 3
CRANKSHAFT & PISTON 5
CYLINDER & CRANKCASE 2 6
VALVE 7
INTAKE 8
CARBURETOR 9
OIL PUMP 11
FUEL 12
STARTER 14
GENERATOR 16
ELECTRICAL 1 17
ELECTRICAL 2 19
ELECTRICAL 3 20
BOTTOM COWLING 21
STEERING 23
STEERING FRICTION 25
CONTROL 26
BRACKET 1 28
BRACKET 2 30
UPPER CASING 31
OIL PAN 32
LOWER CASING & DRIVE 1 33
LOWER CASING & DRIVE 2 36
FUEL TANK 37
REPAIR KIT 1 38
REPAIR KIT 2 39
REPAIR KIT 3 40

INDEX

NUMERICAL INDEX 42

ÍNDICE GERAL

PECAS DE MANUTENCAO PROGRAMADA 1
CAPO SUPERIOR 2
CARCACA DO CILINDRO 1 3
VIRABREQUIM E PISTAO 5
CARCACA DO CILINDRO 2 6
VALVULA 7
ADMISSAO 8
CARBURADOR 9
BOMBA DE OLEO 11
COMBUSTIVEL 12
PARTIDA 14
GERADOR 16
SISTEMA ELETRICO 1 17
SISTEMA ELETRICO 2 19
SISTEMA ELETRICO 3 20
BANDEJA DO CAPO 21
DIRECAO 23
FRICCAO DA DIRECAO 25
CONTROLE 26
SUPORTE 1 28
SUPORTE 2 30
CAPA INFERIOR 31
BANDEJA DE OLEO 32
CARCACA INF. E TRANSMISSAO 1 33
CARCACA INF. E TRANSMISSAO 2 36
TANQUE DE COMBUSTIVEL 37
KIT DE REPARO 1 38
KIT DE REPARO 2 39
KIT DE REPARO 3 40

ÍNDICE GERAL

ÍNDICE NUMÉRICO 42

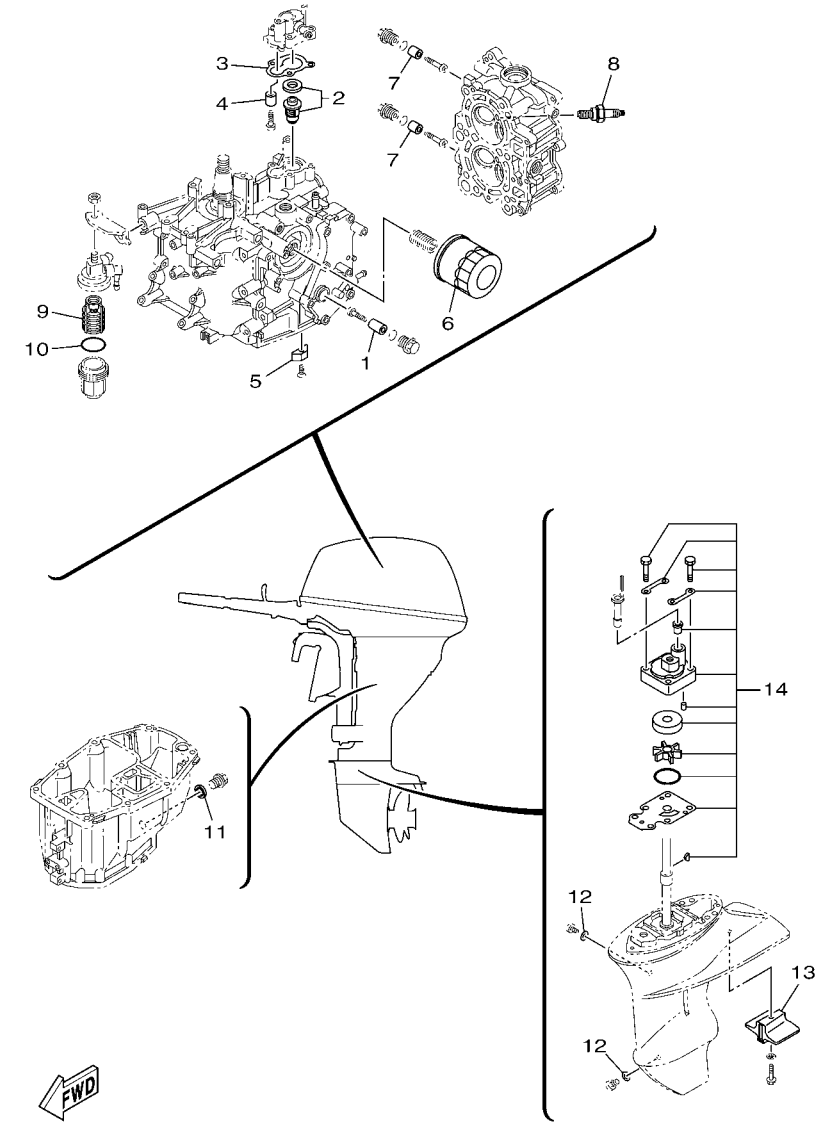

6BY7280-M010

FIG. 1 SCHEDULED SERVICE PARTS PECAS DE MANUTENCAO PROGRAMADA

REF. NO.	PART NO. No. PEÇA	DESCRIPTION DESCRIÇÃO	6BY9					REMARKS OBSERVAÇÕES
1	6G8–11325–00	ANODE ANODO	1					
2	6AH–12411–00	THERMOSTAT TERMOSTATO	1					
3	6AH–12414–00	GASKET, COVER GAXETA DA TAMPA	1					
4	6G8–11325–00	ANODE ANODO	1					
5	6E5–11325–00	ANODE ANODO	1					
6	5GH–13440–50	ELEMENT ASSY, OIL CLEANER ELEMENTO DO FILTRO DE OLEO CJ	1					
7	6G8–11325–00	ANODE ANODO	2					
8	94702–00418	PLUG, SPARK (NGK DPR6EB) VELA DE IGNICAO (NGK DPR6EB)	2					
9	61N–24563–10	ELEMENT, FILTER ELEMENTO DO FILTRO	1					
10	93210–32738	O-RING ANEL DE BORRACHA	1					
11	90430–14M09	GASKET GAXETA	1					
12	90430–08020	GASKET GAXETA	2					
13	6AH–45251–00	ANODE ANODO	1					
14	6AH–W0078–00	WATER PUMP REPAIR KIT JOGO DE REPARO DA BOMBA D'AGUA	1					

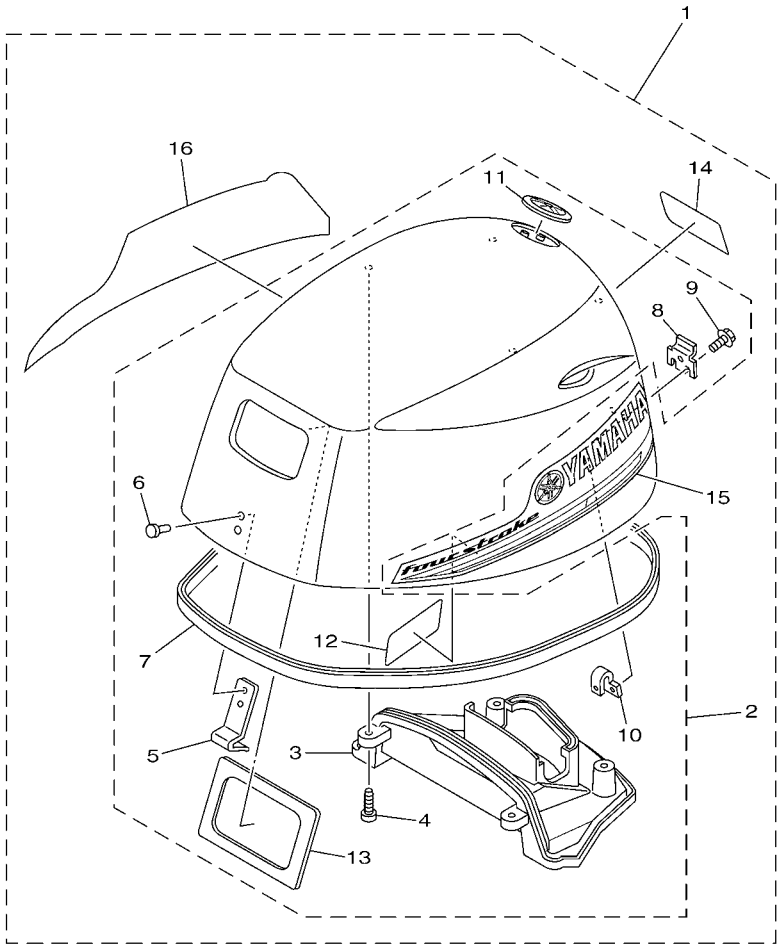

6BY9280-P020

FIG. 2 TOP COWLING CAPO SUPERIOR

REF. NO.	PART NO. No. PEÇA	DESCRIPTION DESCRIÇÃO	6BY9					REMARKS OBSERVAÇÕES
1	6AH–42610–73	TOP COWLING ASSY CAPO SUPERIOR CONJ.	1					
2	6AH–4261A–01	.TOP COWLING W/O GRAPHICS .CAPO SUPERIOR SEM GRAFICOS	1					
3	6AH–42613–A0	..MOLDING, AIR DUCT ..MOLDURA DO DUTO DE AR	1					
4	90167–05017	..SCREW, TAPPING ..PARAFUSO	4					
5	6AH–42651–00	..HOOK ..GANCHO	1					
6	90266–06M02	..RIVET ..REBITE	2					
7	6AH–42615–00	..SEAL ..VEDACAO	1					
8	60R–42652–00	..HOOK ..GANCHO	1					
9	97595–05514	..BOLT, WITH WASHER ..PARAFUSO COM ARRUELA	2					
10	6AH–42649–00	..HOLDER, CLAMP BAND ..SUPORTE DA BRACADEIRA	1					
11	6AH–42697–10	..TUNING FORK MARK ..MARCA YAMAHA	1					
12	6AH–42735–00	..PROTECTOR ..PROTETOR	1					
13	6AH–42656–00	..PROTECTOR, RUBBER SEAL ..PROTETOR, VEDACAO DE BORRACHA	1					
14	6AH–42677–00	.GRAPHIC, FRONT .GRAFICO DIANTEIRO	1					
15	6AG–42675–00	.GRAPHIC, SIDE 1 .GRAFICO LATERAL	1					
16	6AG–42676–00	.GRAPHIC, SIDE 2 .GRAFICO LATERAL	1					

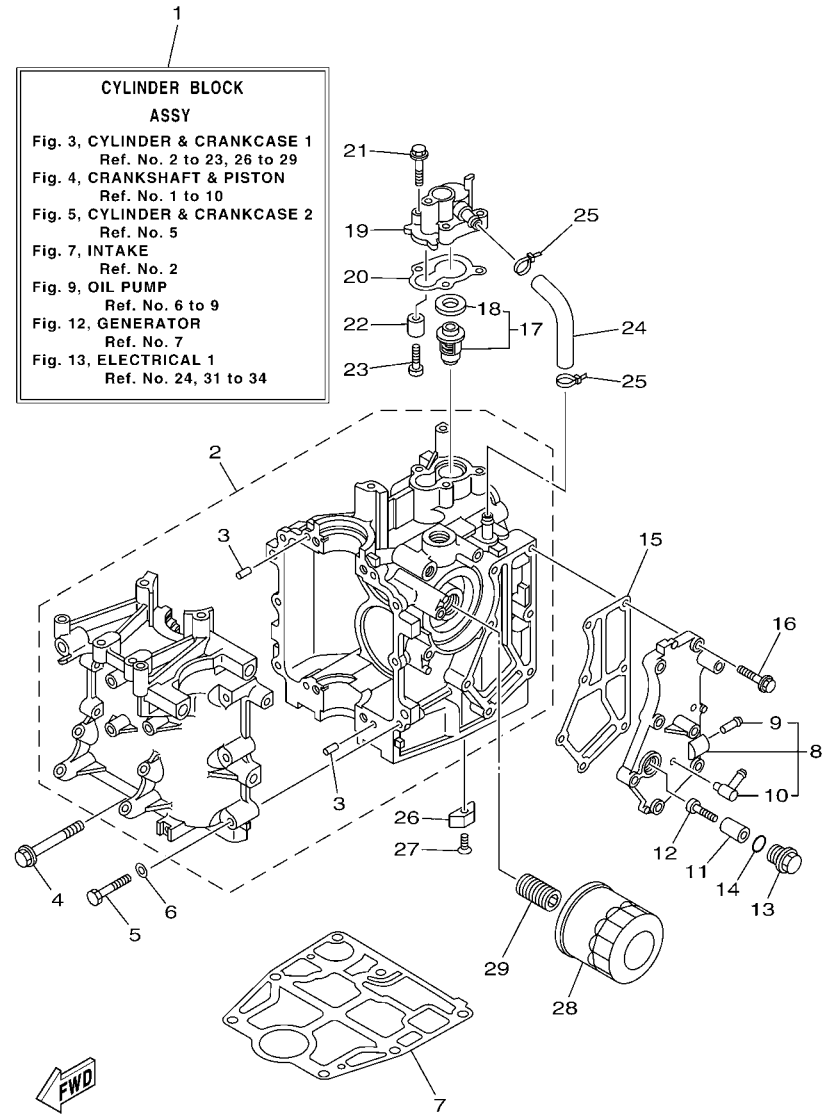

FIG. 3 CYLINDER & CRANKCASE 1 CARCACA DO CILINDRO 1

REF. NO.	PART NO. No. PEÇA	DESCRIPTION DESCRIÇÃO	6BY9					REMARKS OBSERVAÇÕES
1	6AH–W009B–01–1S	CYLINDER BLOCK ASSY GRUPO DE FORCA CONJUNTO	1					
2	6AH–15100–00	CRANKCASE ASSY CARCACA DO MOTOR COMPLETA	1					
3	93606–12019	.PIN, DOWEL .PINO GUIA	4					
4	90119–08093	BOLT, WITH WASHER PARAFUSO COM ARRUELA	4					
5	97013–06040	BOLT PARAFUSO	6					
6	92903–06600	WASHER, PLATE ARRUELA PLANA	6					
7	6AH–11351–10	GASKET, CYLINDER GAXETA DO CILINDRO	1					
8	6AH–41113–00–1S	OUTER COVER, EXHAUST TAMPA EXTERNA DO ESCAPE	1					
9	650–24378–00	.PIPE, JOINT 4 .JUNCAO DO TUBO 4	1					
10	676–11372–00	.NIPPLE, HOSE .JUNCAO DA MANGUEIRA	1					
11	6G8–11325–00	ANODE ANODO	1					
12	98980–05025	SCREW, BIND PARAFUSO	1					
13	6G8–11197–A0	PLUG, BLIND TAMPAO BLINDADO	1					
14	93210–13M63	O-RING ANEL DE BORRACHA	1					
15	6AH–41114–00	GASKET, EXHAUST OUTER COVER GAXETA TAMPA EXTERNA DO ESCAPE	1					
16	90119–06MA3	BOLT, WITH WASHER PARAFUSO COM ARRUELA	7					
17	6AH–12411–00	THERMOSTAT TERMOSTATO	1					
18	688–12412–00	.SEAL, THERMOSTAT .VEDACAO DO TERMOSTATO	1					
19	6AH–12413–00–1S	COVER, THERMOSTAT TAMPA DO TERMOSTATO	1					
20	6AH–12414–00	GASKET, COVER GAXETA DA TAMPA	1					
21	90119–06MA3	BOLT, WITH WASHER PARAFUSO COM ARRUELA	3					
22	6G8–11325–00	ANODE ANODO	1					
23	98980–05025	SCREW, BIND PARAFUSO	1					
24	6AH–12481–00	PIPE 1 TUBO 1	1					
25	90465–11M10	CLAMP BRACADEIRA	2					
26	6E5–11325–00	ANODE ANODO	1					
27	98780–04016	SCREW, FLAT HEAD PARAFUSO CABECA PLANA	1					

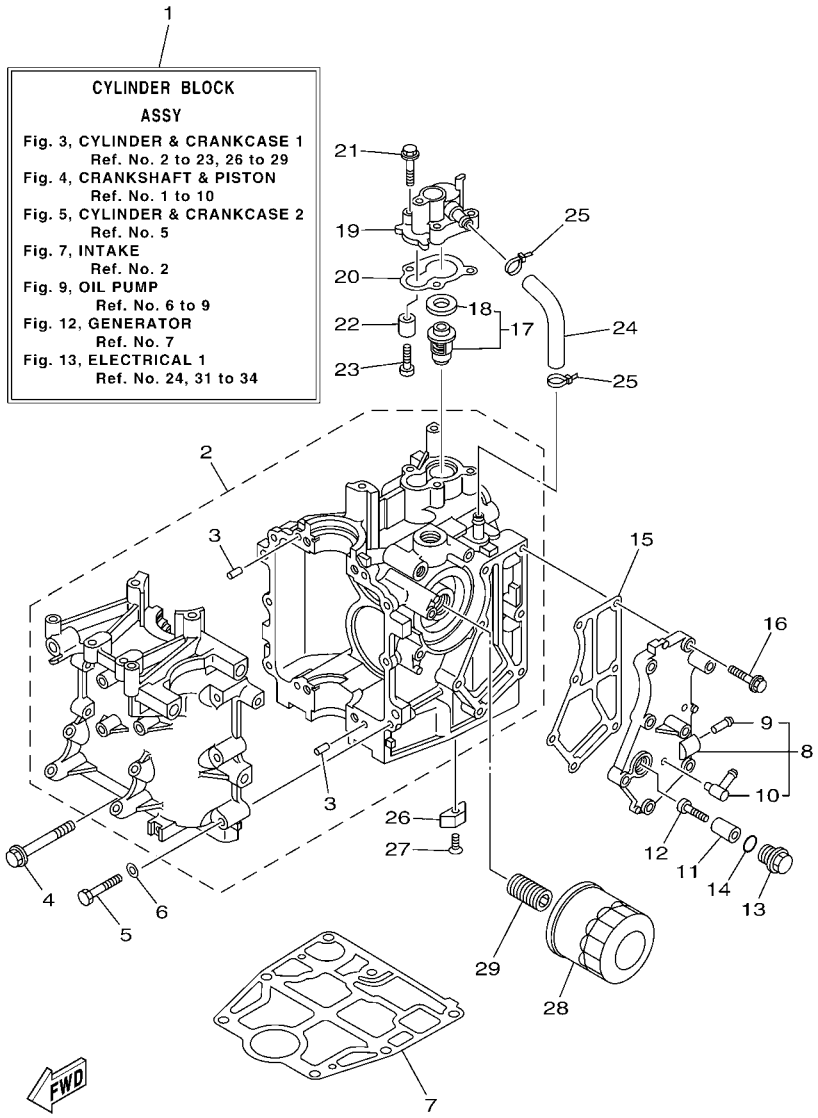

FIG. 3 CYLINDER & CRANKCASE 1 CARCACA DO CILINDRO 1

REF. NO.	PART NO. No. PEÇA	DESCRIPTION DESCRIÇÃO	6BY9					REMARKS OBSERVAÇÕES
28	5GH–13440–50	ELEMENT ASSY, OIL CLEANER ELEMENTO DO FILTRO DE OLEO CJ	1					
29	6C5–12858–00	BOLT, UNION PARAFUSO DE UNIAO	1					

FIG. 4 CRANKSHAFT & PISTON VIRABREQUIM E PISTAO

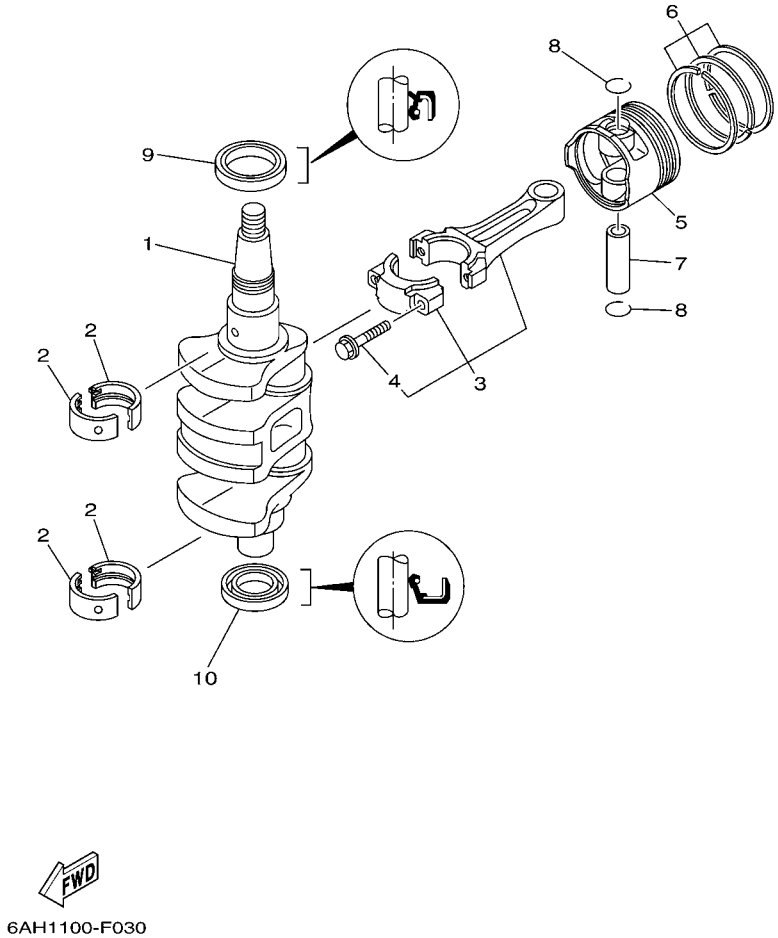

REF. NO.	PART NO. No. PEÇA	DESCRIPTION DESCRIÇÃO	6BY9					REMARKS OBSERVAÇÕES
1	6AH–11411–00	CRANKSHAFT VIRABREQUIM	1					
2	6AH–11416–00	PLANE BEARING, CRANKSHAFT 1 ROLAMENTO PLANO DO VIRABREQ. 1	4					UR BLUE UR BLUE
	6AH–11416–10	PLANE BEARING, CRANKSHAFT 1 ROLAMENTO PLANO DO VIRABREQ. 1	4					UR BLACK UR BLACK
	6AH–11416–20	PLANE BEARING, CRANKSHAFT 1 ROLAMENTO PLANO DO VIRABREQ. 1	4					UR BROWN UR BROWN
3	6AH–11650–10	CONNECTING ROD ASSY BIELA COMPLETA	2					
4	6AH–11654–00	.BOLT, CONNECTING ROD .PARAFUSO DA BIELA	2					
5	6AH–11631–00	PISTON (STD) PISTAO (STD)	2					
	6AH–11635–00	PISTON (0.25MM O/S) PISTAO (0.25MM O/S)	2					AP AP
	6AH–11636–00	PISTON (0.50MM O/S) PISTAO (0.50MM O/S)	2					AP AP
6	6AH–11603–00	PISTON RING SET (STD) JOGO DE ANEIS (STD)	2					
	6AH–11604–00	PISTON RING SET (0.25MM O/S) JOGO DE ANEIS (0.25MM O/S)	2					AP AP
	6AH–11605–00	PISTON RING SET (0.50MM O/S) JOGO DE ANEIS (0.50MM O/S)	2					AP AP
7	137–11633–10	PIN, PISTON PINO DO PISTAO	2					
8	93450–17129	CIRCLIP ANEL TRAVA	4					
9	93102–37004	OIL SEAL RETENTOR DE OLEO	1					
10	93102–25014	OIL SEAL RETENTOR DE OLEO	1					

FIG. 5 CYLINDER & CRANKCASE 2 CARCACA DO CILINDRO 2

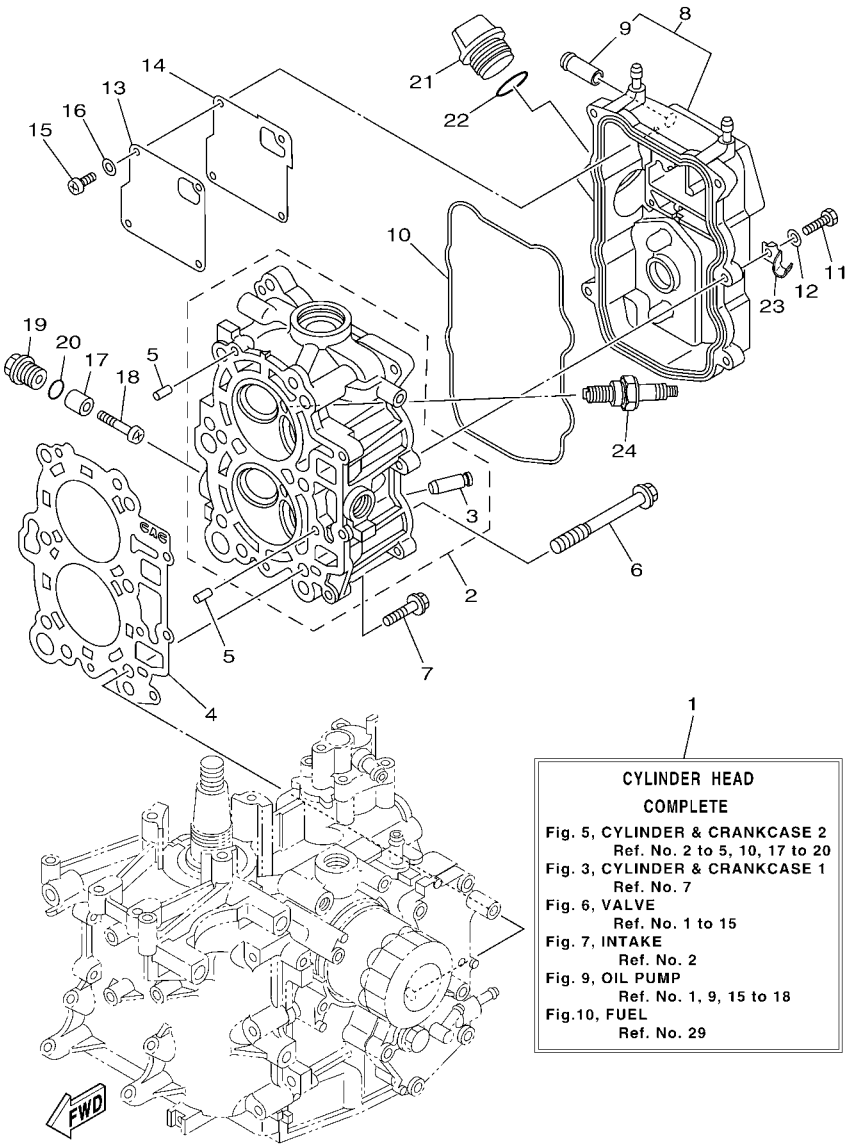

REF. NO.	PART NO. No. PEÇA	DESCRIPTION DESCRIÇÃO	6BY9					REMARKS OBSERVAÇÕES
1	6AH–W009A–01–1S	CYLINDER HEAD COMPLETE CABECOTE DO CILINDRO CONJ	1					
2	6AH–11111–10–1S	HEAD, CYLINDER 1 CABECOTE DO CILINDRO 1	1					
3	6AH–11133–10	.GUIDE, VALVE 1 .GUIA DA VALVULA 1	4					
4	6AG–11181–10	GASKET, CYLINDER HEAD 1 GAXETA, CABECOTE DO CILINDRO 1	1					
5	93606–12019	PIN, DOWEL PINO GUIA	2					
6	90105–09006	BOLT, FLANGE PARAFUSO FLANGE	6					
7	90119–06MA3	BOLT, WITH WASHER PARAFUSO COM ARRUELA	3					
8	6AH–11191–00–1S	COVER, CYLINDER HEAD 1 TAMPA, CABECOTE DO CILINDRO 1	1					
9	6AH–11372–00	.NIPPLE, HOSE .JUNCAO DA MANGUEIRA	1					
10	6AH–11356–00	SEAL, CYLINDER 2 VEDACAO DO CILINDRO 2	1					
11	97095–06020	BOLT PARAFUSO	5					
12	92995–06600	WASHER ARRUELA	5					
13	6AH–11168–00	COVER, BREATHER TAMPA DE RESPIRO	1					
14	6AH–11169–00	GASKET, BREATHER COVER GAXETA DA TAMPA DO RESPIRO	1					
15	98507–04010	SCREW, PAN HEAD PARAFUSO CABECA PANELA	4					
16	92907–04600	WASHER ARRUELA	4					
17	6G8–11325–00	ANODE ANODO	2					
18	98980–05025	SCREW, BIND PARAFUSO	2					
19	6G8–11197–A0	PLUG, BLIND TAMPAO BLINDADO	2					
20	93210–13M63	O-RING ANEL DE BORRACHA	2					
21	6G8–15363–00	PLUG, OIL TAMPAO DO NIVEL DE OLEO	1					
22	93210–24M79	O-RING ANEL DE BORRACHA	1					
23	90465–08059	CLAMP BRACADEIRA	1					
24	94702–00418	PLUG, SPARK (NGK DPR6EB) VELA DE IGNICAO (NGK DPR6EB)	2					

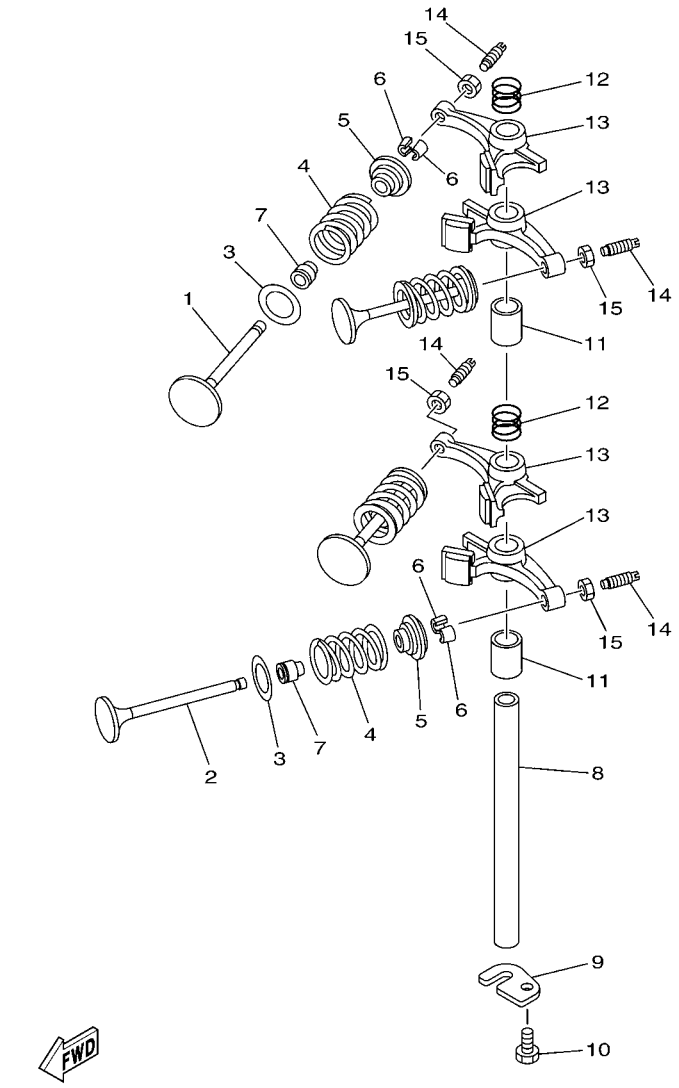

6AH1100-F050

FIG. 6 VALVE — VALVULA

REF. NO.	PART NO. No. PEÇA	DESCRIPTION DESCRIÇÃO	6BY9					REMARKS OBSERVAÇÕES
1	6AH–12111–00	VALVE, INTAKE VALVULA DE ADMISSAO	2					
2	6AH–12121–10	VALVE, EXHAUST VALVULA DE ESCAPE	2					
3	62Y–12116–00	SEAT, VALVE SPRING ASSENTO INFERIOR DA MOLA	4					
4	3YF–12113–00	SPRING, VALVE INNER MOLA INTERNA DA VALVULA	4					
5	30X–12117–00	RETAINER, VALVE SPRING ASSENTO SUPERIOR DA MOLA	4					
6	30X–12118–00	LOCK, VALVE SPRING RETAINER TRAVA DA VALVULA	8					
7	51Y–12119–00	SEAL, VALVE STEM RETENTOR DA HASTE DA VALVULA	4					
8	66M–12146–00	SHAFT, ROCKER EIXO DO BALANCIM	1					
9	6AH–12279–00	PLATE PLACA	1					
10	97013–06012	BOLT PARAFUSO	1					
11	90387–13006	COLLAR ESPACADOR	2					
12	90501–120A5	SPRING, COMPRESSION MOLA DE COMPRESSAO	2					
13	6AH–12151–00	ARM, VALVE ROCKER BRACO DO BALANCIM DA VALVULA	4					
14	64J–12159–00	SCREW, VALVE ADJUSTING PARAFUSO DE AJUSTE DA VALVULA	4					
15	62Y–12158–00	NUT, LOCK PORCA TRAVA	4					

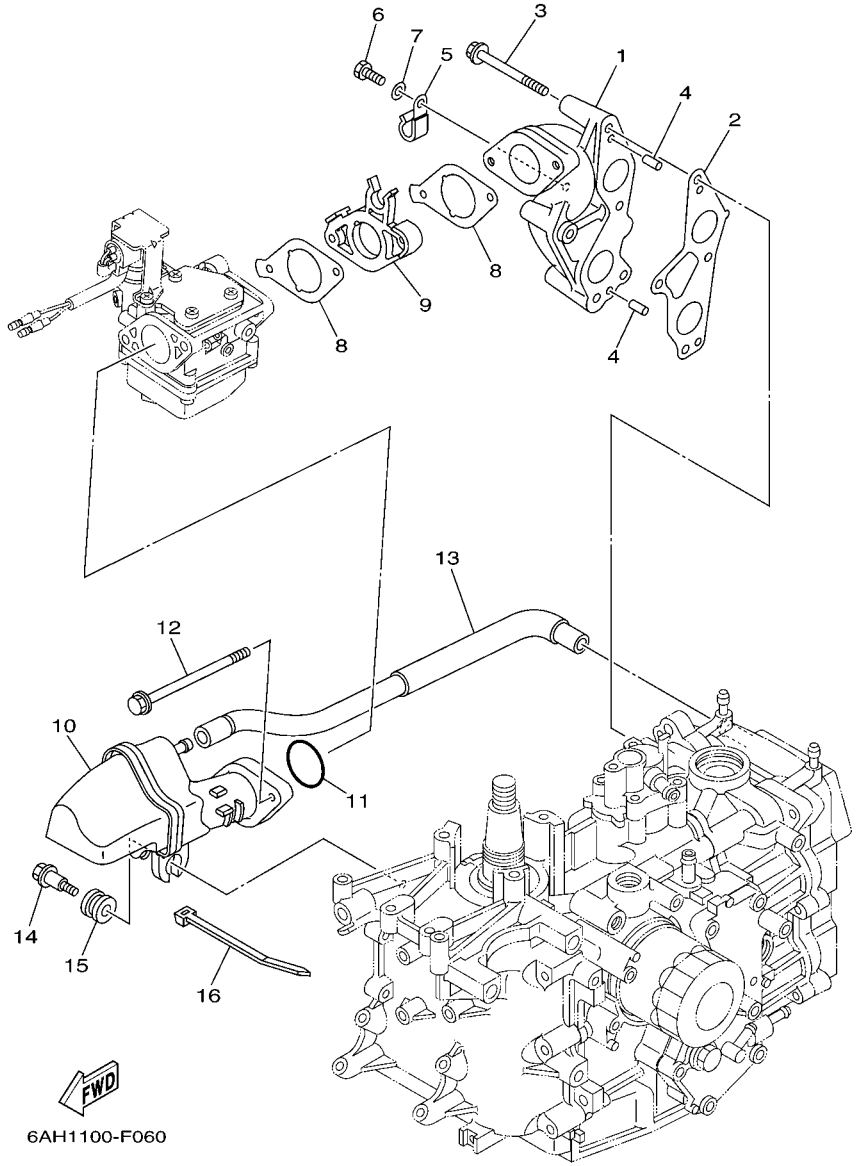

FIG. 7 INTAKE — ADMISSAO

REF. NO.	PART NO. No. PEÇA	DESCRIPTION DESCRIÇÃO	6BY9					REMARKS OBSERVAÇÕES
1	6AH–13641–00–94	MANIFOLD, INTAKE 1 TUBO MULTIPLO DE ADMISSAO 1	1					
2	6AH–13645–00	GASKET, MANIFOLD 1 GAXETA DO TUBO MULTIPLO 1	1					
3	97595–06555	BOLT, WITH WASHER PARAFUSO COM ARRUELA	4					
4	91690–50014	PIN, SPRING PINO MOLA	2					
5	90465–08M83	CLAMP BRACADEIRA	2					
6	97095–06012	BOLT PARAFUSO	2					
7	92995–06600	WASHER ARRUELA	2					
8	6AH–13646–00	GASKET, MANIFOLD 2 GAXETA DO TUBO MULTIPLO 2	2					
9	6AH–14271–00	INSULATOR ISOLADOR	1					
10	6AH–14440–00	SILENCER ASSY, INTAKE SILENCIADOR DA ADMISSAO CONJ.	1					
11	93210–35M86	O-RING ANEL DE BORRACHA	1					
12	95895–06100	BOLT, FLANGE PARAFUSO FLANGE	2					
13	6AH–15373–00	PIPE, BREATHER TUBO DO RESPIRO	1					
14	90109–06MA1	BOLT PARAFUSO	1					
15	90480–16616	GROMMET ILHO DE BORRACHA	1					
16	90465–13M18	CLAMP BRACADEIRA	1					

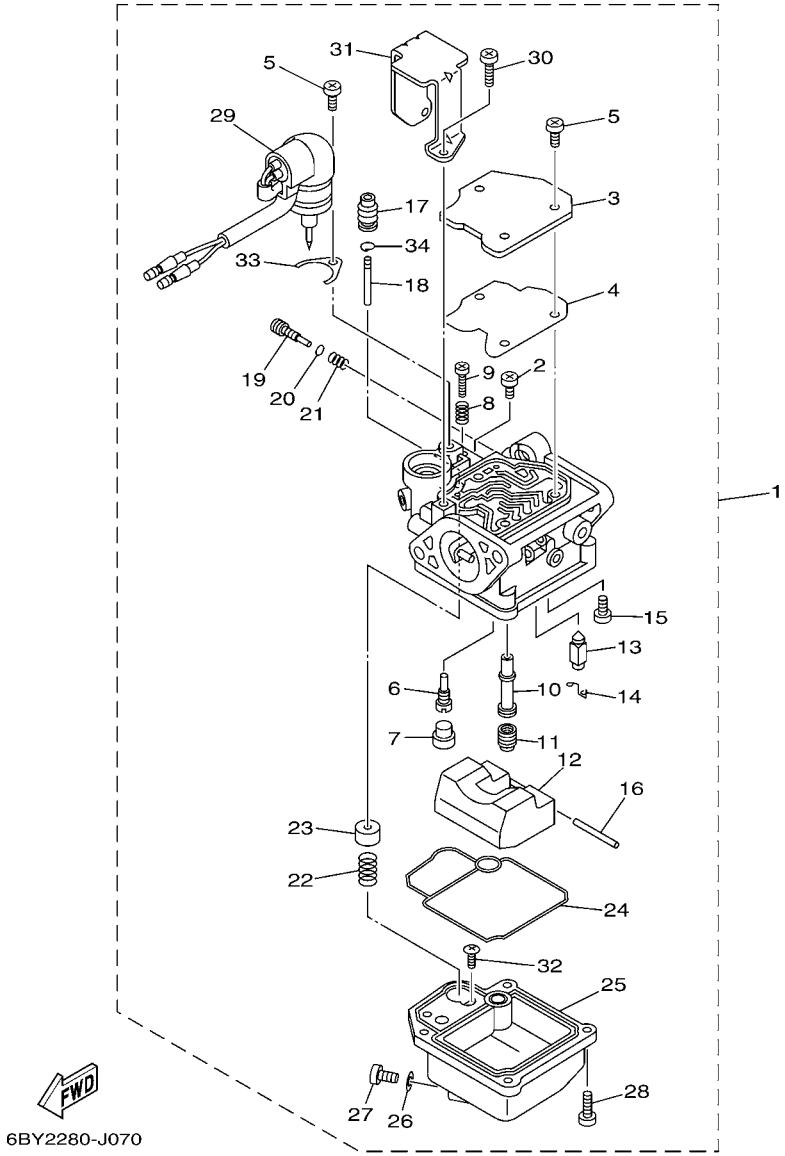

FIG. 8 CARBURETOR CARBURADOR

REF. NO.	PART NO. No. PEÇA	DESCRIPTION DESCRIÇÃO	6BY9					REMARKS OBSERVAÇÕES
1	6AH–14301–H0	CARBURETOR ASSY 1 CARBURADOR COMPLETO 1	1					
2	98580–04006	.SCREW, PAN HEAD .PARAFUSO	1					
3	65W–14572–00	.PLATE .PLACA	1					
4	65W–14126–10	.GASKET .GAXETA	1					
5	97980–04110	.SCREW, WITH WASHER .PARAFUSO	4					
6	6AH–14948–06	.JET (#48) .GICLEUR (#48)	1					
7	679–14966–00	.RUBBER CAP .CAPA	1					
8	90501–10326	.SPRING, COMPRESSION .MOLA DE COMPRESSAO	1					
9	63V–14523–00	.SCREW, STOP .PARAFUSO DE PARADA	1					
10	6AH–14947–00	.JET, NEEDLE .GICLEUR DA AGULHA	1					
11	676–14943–33	.JET, MAIN (#130) .GICLEUR PRINCIPAL (#130)	1					
12	6AH–14985–00	.FLOAT .BOIA	1					
13	6AH–14546–00	.VALVE, NEEDLE .VALVULA DA AGULHA	1					
14	633–14159–00	.CLIP .PRESILHA	1					
15	98580–04008	.SCREW, PAN HEAD .PARAFUSO	1					
16	6H4–14548–00	.PIN, FLOAT ARM .PINO DA BOIA	1					
17	65W–14373–02	.COVER, PLUNGER CAP .CAPA DA HASTE DE ACELERACAO	1					
18	6AH–14379–00	.ROD, STARTER .HASTE DE ACELERACAO	1					
19	67C–14923–00	.SCREW, PILOT .PARAFUSO PILOTO	1					
20	67F–14398–10	.O-RING .ANEL DE BORRACHA	1					
21	67C–14555–00	.SPRING .MOLA	1					
22	6AH–14335–00	.SPRING, PLUNGER .MOLA	1					
23	6AH–14371–00	.PLUNGER, STARTER .AFOGADOR DE ACELERACAO	1					
24	6AH–14384–00	.GASKET, FLOAT CHAMBER .GAXETA DA CAMARA DA BOIA	1					
25	6AH–14980–70	.BODY, FLOAT CHAMBER .CORPO DA CAMARA DA BOIA	1					
26	65W–14398–00	.GASKET .GAXETA	1					
27	65W–14992–00	.SCREW, DRAIN .PARAFUSO DE DRENO	1					

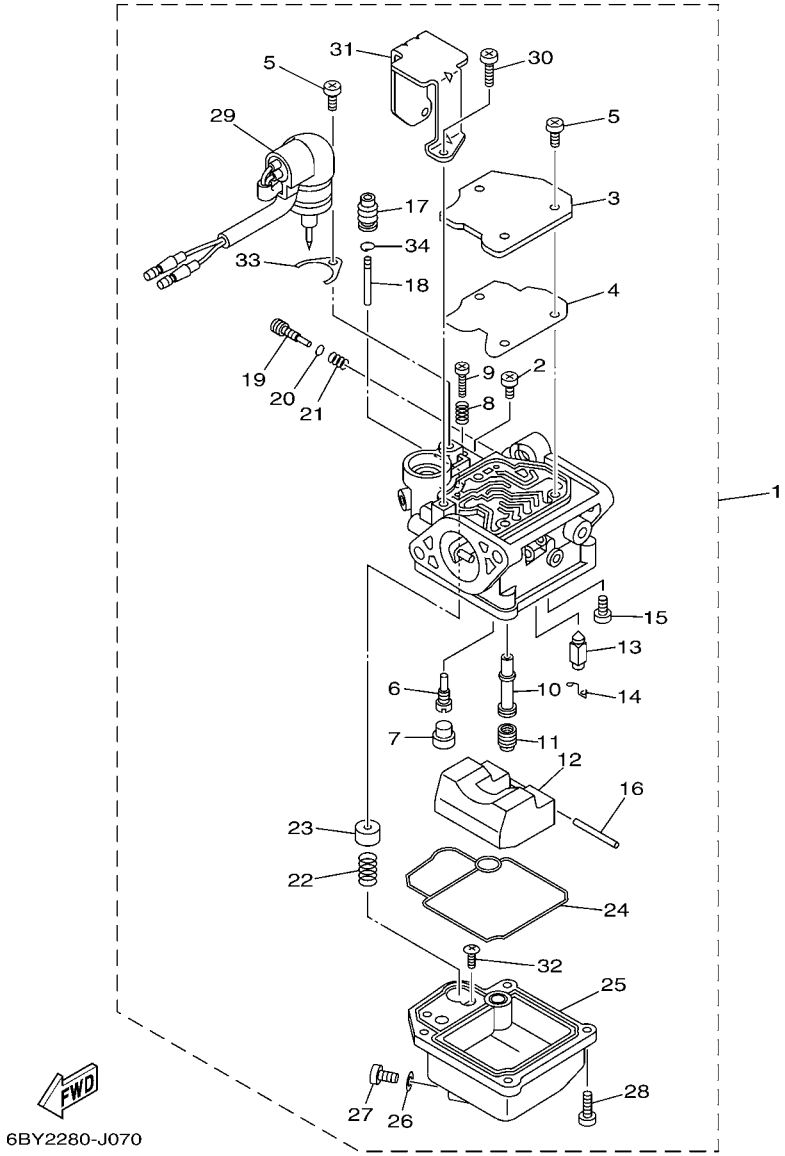

FIG. 8 CARBURETOR CARBURADOR

REF. NO.	PART NO. No. PEÇA	DESCRIPTION DESCRIÇÃO	6BY9					REMARKS OBSERVAÇÕES
28	97980–04114	.SCREW, WITH WASHER .PARAFUSO	4					
29	6AH–14380–21	.PRIME STARTER ASSY .PARTIDA PRIMARIA COMPLETA	1					
30	97980–04108	.SCREW, WITH WASHER .PARAFUSO	2					
31	6AH–14346–00	.PLATE .PLACA	1					
32	67C–14567–00	.SCREW .PARAFUSO	1					
33	65W–14346–00	.PLATE .PLACA	1					
34	65W–1439G–00	.CLIP 1 .PRESILHA 1	1					

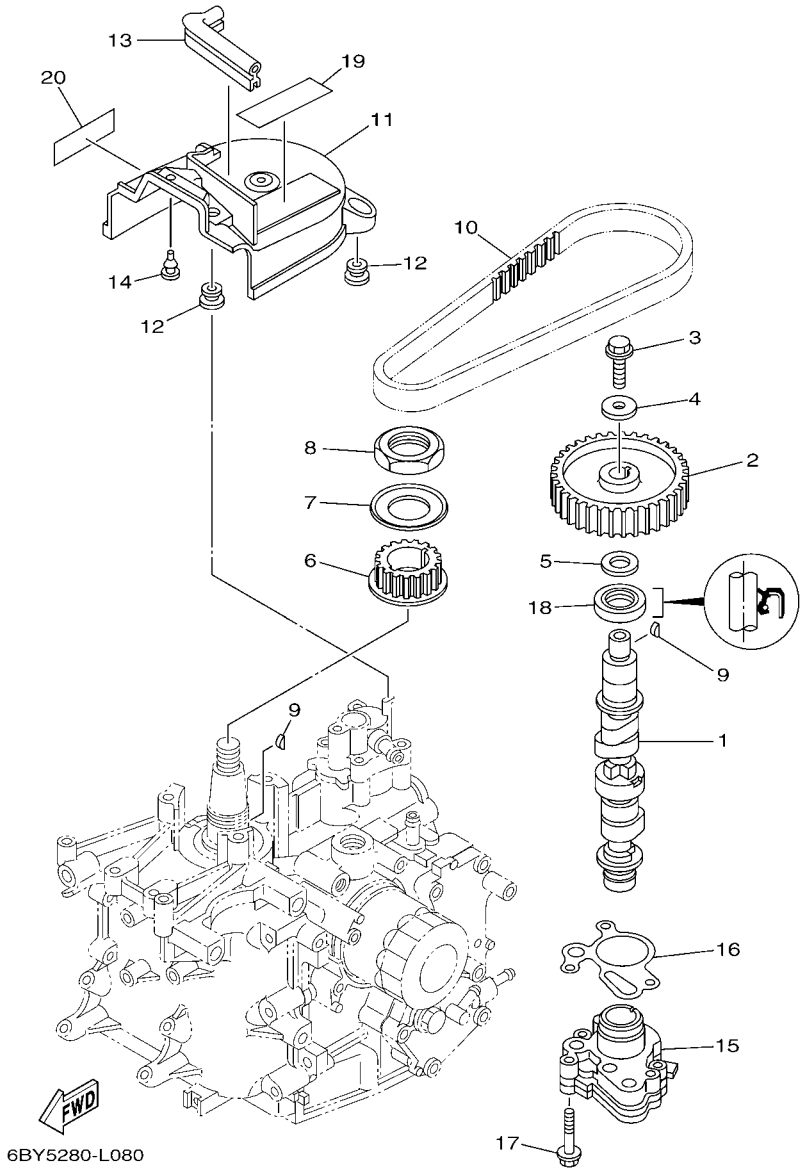

FIG. 9 OIL PUMP — BOMBA DE OLEO

REF. NO.	PART NO. No. PEÇA	DESCRIPTION DESCRIÇÃO	6BY9					REMARKS OBSERVAÇÕES
1	6AH–12170–00	CAMSHAFT ASSY 1 EIXO DE COMANDO COMPLETO 1	1					
2	6AH–11537–00	GEAR, DRIVEN ENGRENAGEM MOTRIZ	1					
3	90105–081A7	BOLT, FLANGE PARAFUSO FLANGE	1					
4	90201–08784	WASHER, PLATE ARRUELA PLANA	1					
5	90201–15423	WASHER, PLATE ARRUELA PLANA	1					
6	6AH–11536–00	GEAR, DRIVE ENGRENAGEM MOTORA	1					
7	6AH–11557–00	WASHER 1 ARRUELA 1	1					
8	90170–30003	NUT PORCA	1					
9	90280–03M01	KEY, WOODRUFF CHAVETA MEIA LUA	2					
10	6AH–46241–00	BELT CINTO	1					
11	6AH–46297–00	COVER, DUST PROTETOR DE POEIRA	1					
12	90480–10627	GROMMET ILHO DE BORRACHA	3					
13	6AH–42617–00	DAMPER, FORM AMORTIZADOR DO CONTORNO	1					
14	90480–06M19	GROMMET ILHO DE BORRACHA	1					
15	6AH–13300–00	OIL PUMP ASSY BOMBA DE OLEO COMPLETA	1					
16	6AH–13329–10	GASKET, PUMP COVER GAXETA DA TAMPA DA BOMBA	1					
17	90105–06035	BOLT, FLANGE PARAFUSO FLANGE	3					
18	93102–22010	OIL SEAL RETENTOR DE OLEO	1					
19	6AH–13437–70	MARK, CAUTION ETIQUETA DE ADVERTENCIA	1					
20	6AH–81994–70	LABEL, SAFETY ETIQUETA DE SEGURANCA	1					

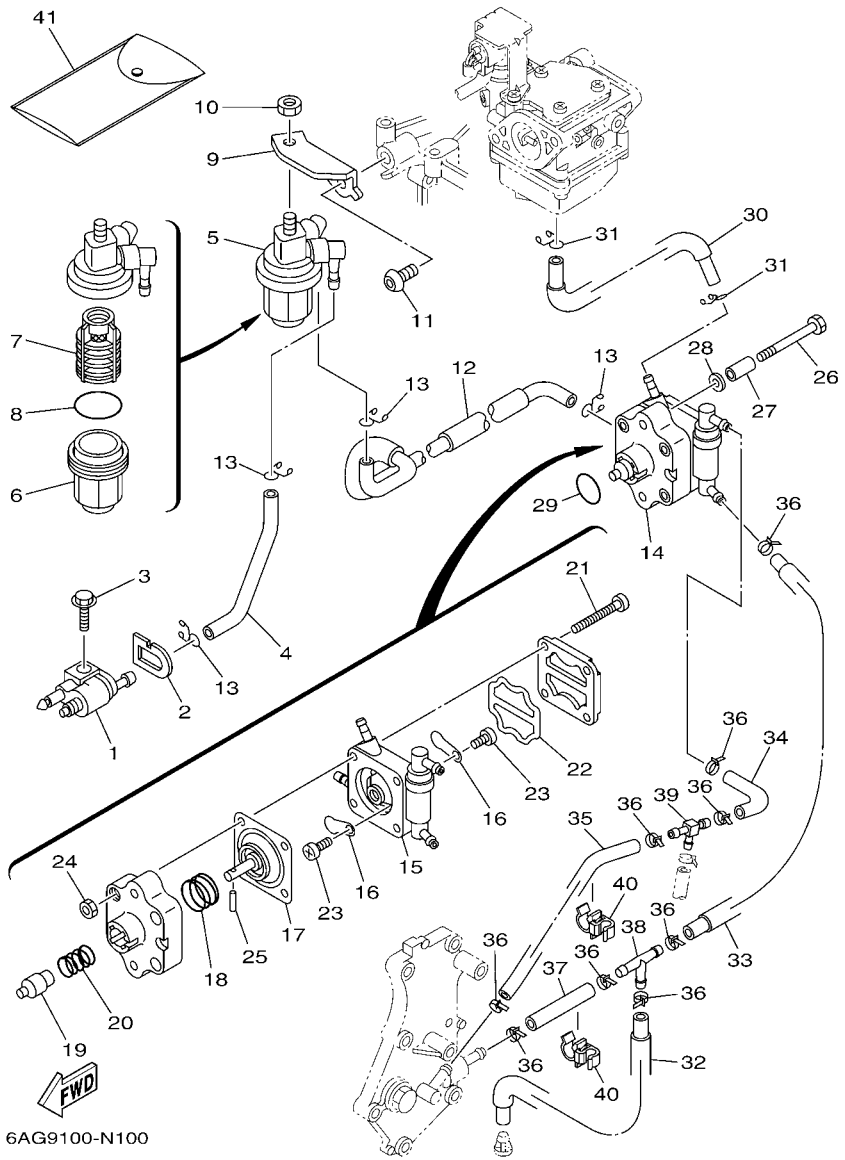

FIG. 10 FUEL — COMBUSTIVEL

REF. NO.	PART NO. No. PEÇA	DESCRIPTION DESCRIÇÃO	6BY9					REMARKS OBSERVAÇÕES
1	6G1–24304–02	FUEL PIPE JOINT COMP. 1 JUNCAO TUBO DE COMBUSTIVEL 1	1					
2	61N–24329–00	SEAL GUARNICAO	1					
3	95895–06020	BOLT, FLANGE PARAFUSO FLANGE	1					
4	6AH–24311–00	PIPE, FUEL 1 TUBO DE COMBUSTIVEL 1	1					
5	61N–24560–10	FILTER ASSY FILTRO DE COMBUSTIVEL CONJ.	1					
6	61N–24521–00	.CUP, FILTER .COPO DO FILTRO	1					
7	61N–24563–10	.ELEMENT, FILTER .ELEMENTO DO FILTRO	1					
8	93210–32738	.O-RING .ANEL DE BORRACHA	1					
9	6AH–24566–00	BRACKET, FILTER SUPORTE DO FILTRO	1					
10	95380–08600	NUT PORCA	1					
11	90111–08055	BOLT,HEX. SOCKET BUTTON PARAFUSO	1					
12	6AH–24312–00	PIPE 2 TUBO 2	1					
13	90467–09M17	CLIP PRESILHA	4					
14	6AH–24410–70	FUEL PUMP ASSY BOMBA DE COMBUSTIVEL CONJ.	1					
15	6AH–24413–70	.BODY 2 .CARCACA 2	1					
16	6A0–24421–01	.VALVE, CHECK .VALVULA DA BOMBA	2					
17	66M–24411–11	.DIAPHRAGM .DIAFRAGMA	1					
18	66M–24423–00	.SPRING, DIAPHRAGM .MOLA DO DIAFRAGMA	1					
19	66M–13131–10	.PLUNGER .ESPACADOR	1					
20	66M–24454–00	.SPRING .MOLA	1					
21	66M–24444–00	.SCREW .PARAFUSO	4					
22	66M–24471–01	.DIAPHRAGM .DIAFRAGMA	1					
23	6E7–14325–00	.SCREW, PAN HEAD .PARAFUSO DE CABECA PANELA	2					
24	95380–04600	.NUT .PORCA	4					
25	66M–24374–00	.PIN .PINO	1					
26	90101–06032	BOLT PARAFUSO	2					
27	90387–06M17	COLLAR ESPACADOR	2					

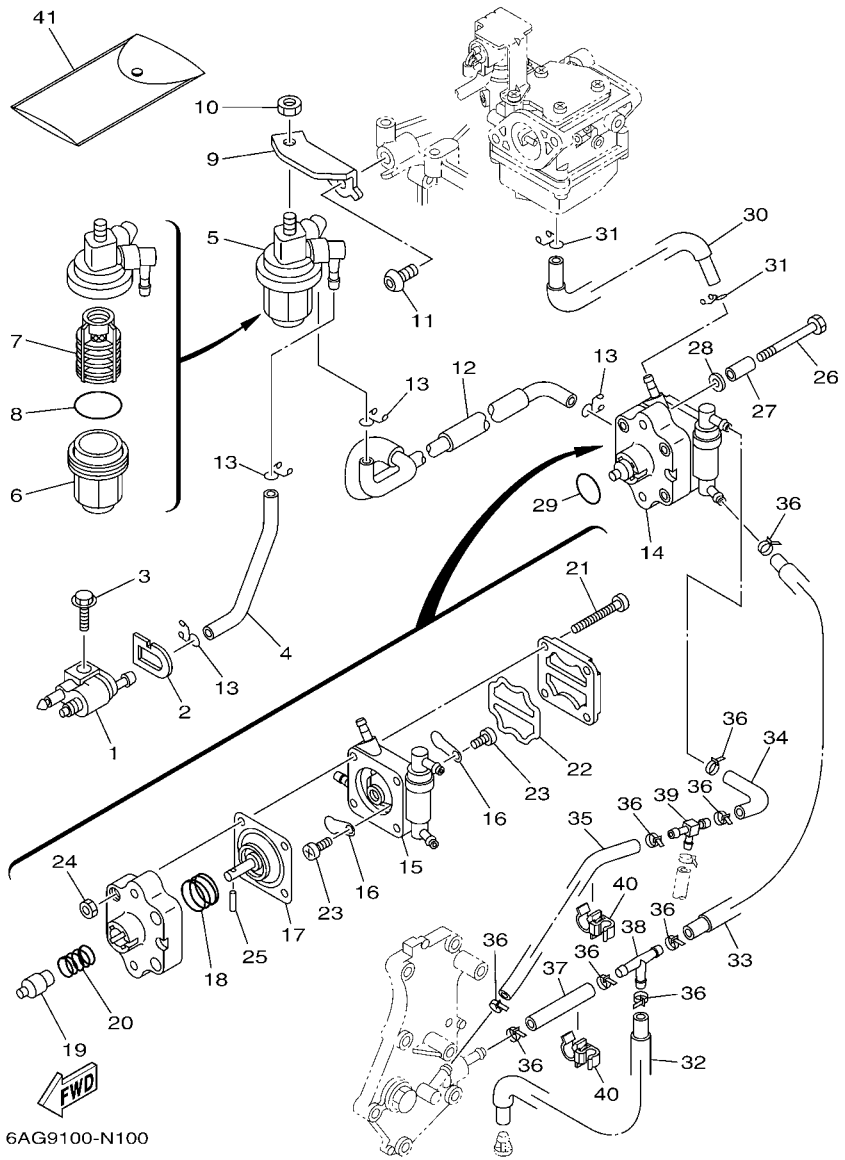

FIG. 10 FUEL — COMBUSTIVEL

REF. NO.	PART NO. No. PEÇA	DESCRIPTION DESCRIÇÃO	6BY9					REMARKS OBSERVAÇÕES
28	90201–06106	WASHER, PLATE ARRUELA PLANA	2					
29	93210–20M65	O-RING ANEL DE BORRACHA	1					
30	6AH–24313–00	PIPE 3 TUBO 3	1					
31	90467–09M17	CLIP PRESILHA	2					
32	6AH–24321–00	PIPE 10 TUBO 10	1					
33	6AH–24322–00	PIPE 11 TUBO 11	1					
34	90445–09026	HOSE (L68) TUBO (L68)	1					
35	90445–09082	HOSE (L150) TUBO (L150)	1					
36	90465–11M10	CLAMP BRACADEIRA	9					
37	90445–09061	HOSE (L65) TUBO (L65)	1					
38	688–24378–00	PIPE, JOINT 3 JUNCAO DO TUBO 3	1					
39	6C5–24378–00	PIPE, JOINT 3 JUNCAO DO TUBO 3	1					
40	90464–09018	CLAMP BRACADEIRA	2					
41	62Y–28100–00	TOOL KIT JOGO DE FERRAMENTAS	1					

FIG. 11 STARTER PARTIDA

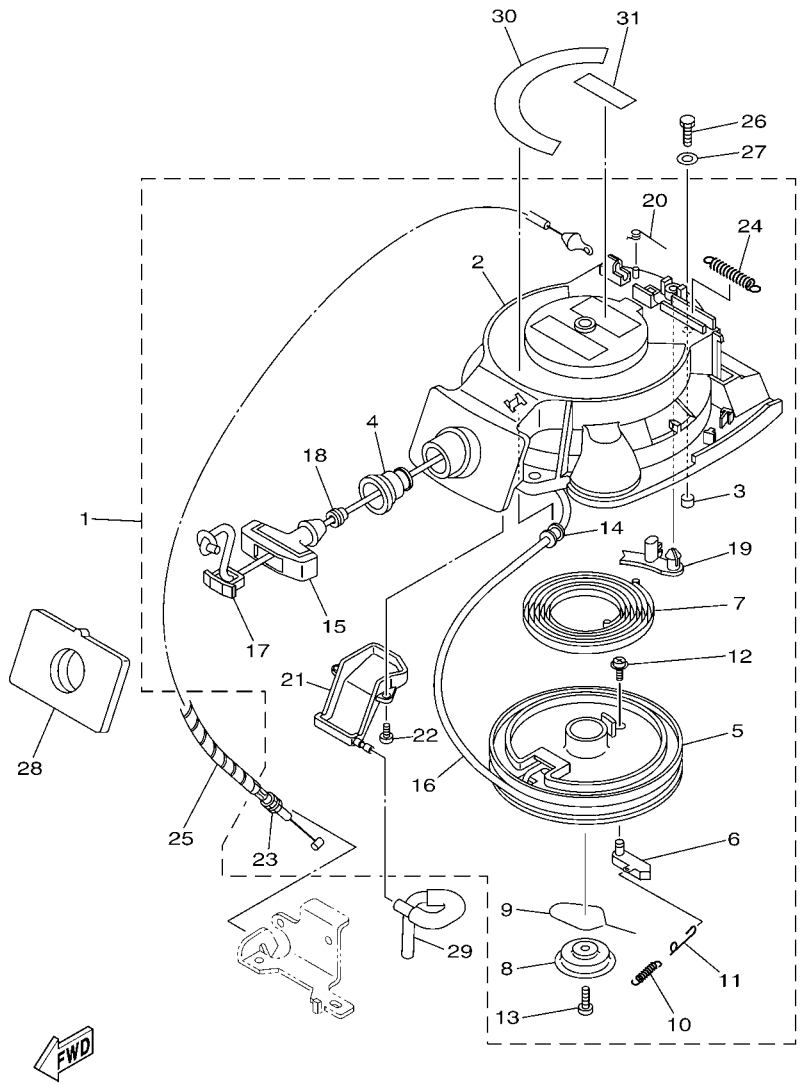

6BY5280-L100

*1:CUT FROM 50M ROLLS,PART NO.90890-44373,CUTTING LENGTH 1.8M

REF. NO.	PART NO. No. PEÇA	DESCRIPTION DESCRIÇÃO	6BY9					REMARKS OBSERVAÇÕES
1	6AH–15710–01	STARTER ASSY PARTIDA COMPLETA	1					
2	6AH–15711–00	.CASE, STARTER .CAIXA DA PARTIDA	1					
3	67D–15764–00	.COLLAR 1 .ESPACADOR 1	3					
4	6AH–15795–00	.GUIDE, ROPE .GUIA DO CABO	1					
5	63V–15714–00	.DRUM, SHEAVE .TAMBOR DA ROLDANA	1					
6	6AH–15741–10	.PAWL, DRIVE .CHAVETA DA PARTIDA	1					
7	63V–15713–00	.SPRING, STARTER .MOLA DA PARTIDA	1					
8	68T–15716–00	.PLATE, DRIVE .PLACA MOTORA	1					
9	63V–15705–01	.SPRING, DRIVE PAWL .MOLA ESPECIAL DA PARTIDA	1					
10	63V–15767–01	.SPRING .MOLA	1					
11	68T–15784–00	.SPRING, RETURN .MOLA DE RETORNO	1					
12	63V–15793–00	.SCREW .PARAFUSO	1					
13	68T–15793–00	.SCREW .PARAFUSO	1					
14	68T–15764–00	.COLLAR 1 .ESPACADOR 1	1					
15	689–15755–01	.HANDLE, STARTER .MANOPLA DE PARTIDA	1					
16	*	.WIRE, STARTER (L:1800MM) .CABO DE PARTIDA (L:1800MM)	1					*1 *1
17	6F5–15779–02	.COVER .TAMPA	1					
18	6A0–15789–00	.DAMPER .AMORTIZADOR	1					
19	66T–15794–00	.STOPPER .BUJAO	1					
20	66T–15734–00	.SPRING, RETURN .MOLA DE RETORNO	1					
21	6AH–15782–00	.COVER, SHEAVE .TAMPA DA ROLDANA	1					
22	6AH–15793–00	.SCREW .PARAFUSO	2					
23	6AH–15770–00	.CABLE COMP., STARTER STOP .CABO COMP. DE PARADA (PARTIDA)	1					
24	66T–15731–00	.SPRING, RETURN .MOLA DE RETORNO	1					
25	90446–06M90	HOSE (L120) TUBO (L120)	1					
26	97095–06020	BOLT PARAFUSO	3					
27	92995–06600	WASHER ARRUELA	3					

FIG. 11 STARTER PARTIDA

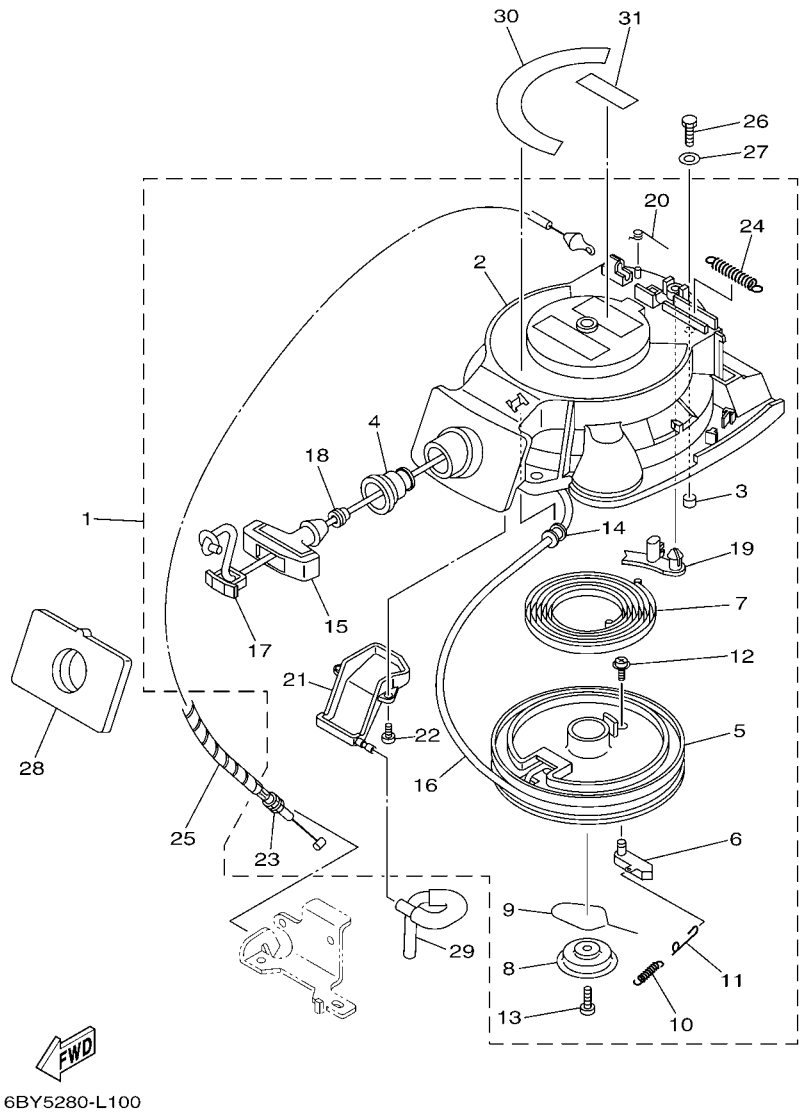

*1:CUT FROM 50M ROLLS,PART NO.90890-44373,CUTTING LENGTH 1.8M

REF. NO.	PART NO. No. PEÇA	DESCRIPTION DESCRIÇÃO	6BY9					REMARKS OBSERVAÇÕES
28	6AH–15762–01	SEAL, RUBBER 2 VEDACAO DE BORRACHA 2	1					
29	6AH–24316–00	PIPE 6 TUBO 6	1					
30	6AH–14427–70	LABEL, INSTRUCTION ETIQUETA DE ADVERTENCIA	1					
31	6AH–81995–70	LABEL, WARNING ETIQUETA ADVERTENCIA	1					

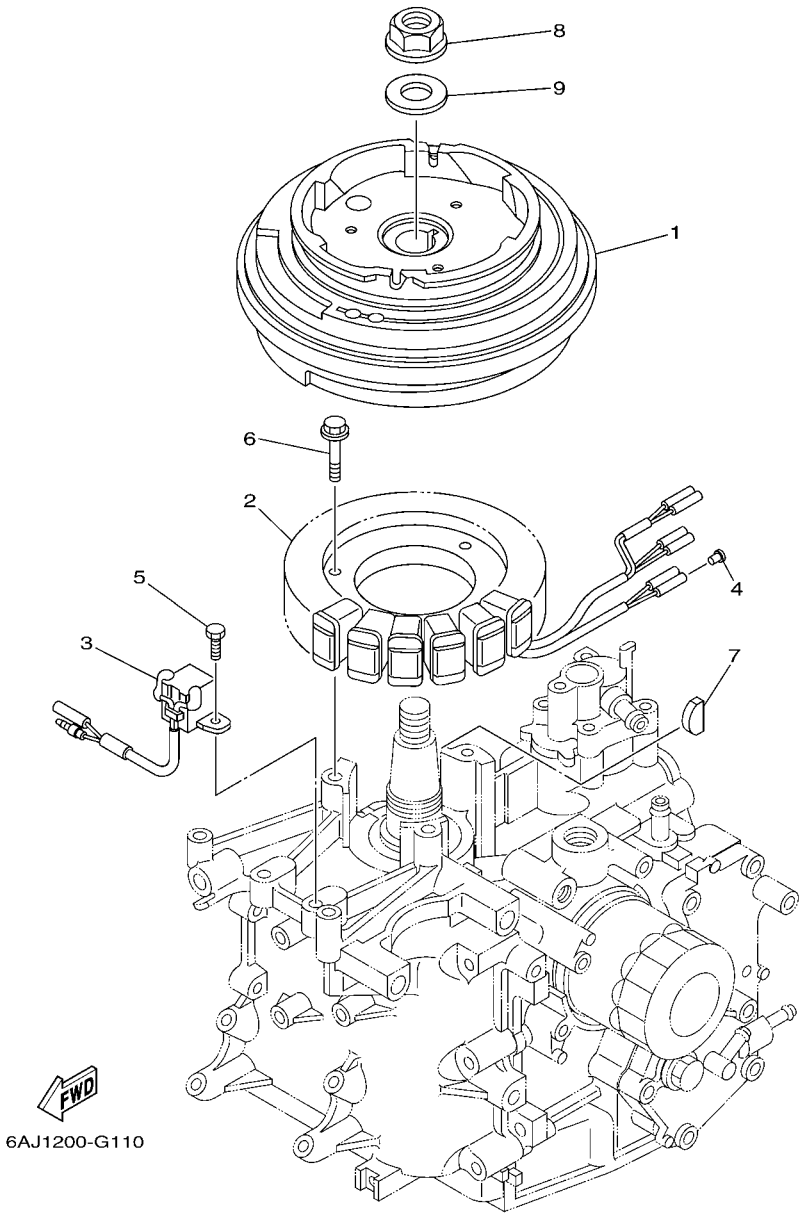

FIG. 12 GENERATOR GERADOR

REF. NO.	PART NO. No. PEÇA	DESCRIPTION DESCRIÇÃO	6BY9					REMARKS OBSERVAÇÕES
1	6AH–85550–00	ROTOR ASSY ROTOR CONJ.	1					
2	6AH–85510–00	STATOR ASSY ESTATOR CONJUNTO	1					
3	6AH–85580–00	COIL, PULSER BOBINA DE PULSO CONJUNTO	1					
4	703–82119–00	COVER, LEAD WIRE TAMPA DO FIO DA BATERIA	2					
5	97095–05012	BOLT PARAFUSO	2					
6	95895–06030	BOLT, FLANGE PARAFUSO FLANGE	3					
7	90280–05013	KEY, WOODRUFF CHAVETA MEIA LUA	1					
8	90179–16M05	NUT PORCA	1					
9	90201–16M44	WASHER, PLATE ARRUELA PLANA	1					

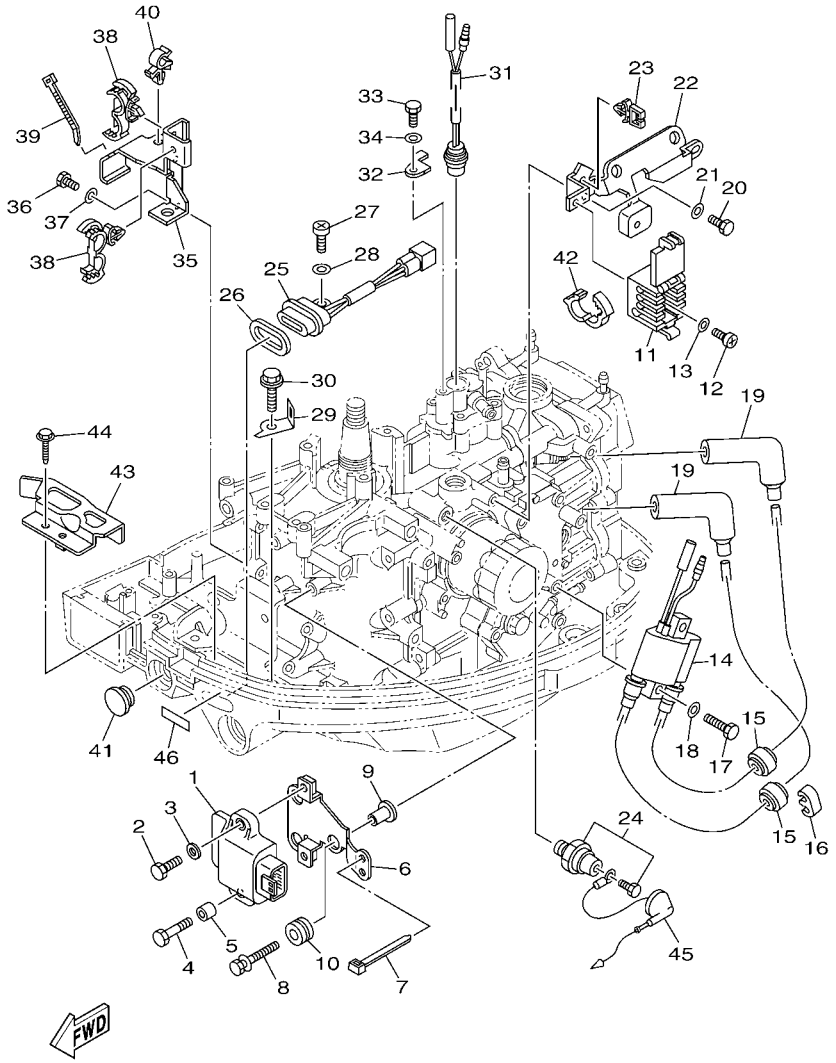

6CA8300-P130

FIG. 13 ELECTRICAL 1 — SISTEMA ELETRICO 1

REF. NO.	PART NO. No. PEÇA	DESCRIPTION DESCRIÇÃO	6BY9					REMARKS OBSERVAÇÕES
1	6AH–85540–00	C.D.I. UNIT ASSY UNIDADE DE IGNICAO CONJ. (CDI)	1					
2	97095–06020	BOLT PARAFUSO	1					
3	92995–06600	WASHER ARRUELA	1					
4	97095–06030	BOLT PARAFUSO	1					
5	90387–06M74	COLLAR ESPACADOR	1					
6	6AH–81948–00	BRACKET SUPORTE	1					
7	90465–13M18	CLAMP BRACADEIRA	1					
8	90119–06M35	BOLT, WITH WASHER PARAFUSO COM ARRUELA	3					
9	90387–06289	COLLAR ESPACADOR	3					
10	90480–10M23	GROMMET ILHO DE BORRACHA	3					
11	6AH–82522–00	CLAMP, COUPLER BRACADEIRA DO ACOPLADOR	1					
12	97880–06010	SCREW, PAN HEAD PARAFUSO	1					
13	90201–06M05	WASHER, PLATE ARRUELA PLANA	1					
14	6F5–85570–13	IGNITION COIL ASSY BOBINA DE IGNICAO CONJ.	1					
15	90480–25003	GROMMET ILHO DE BORRACHA	2					
16	67F–82361–00	CLAMP, CORD GRAMPO FIXADOR DO TUBO	1					
17	97095–06025	BOLT PARAFUSO	2					
18	92995–06600	WASHER ARRUELA	2					
19	6AH–82370–00	PLUG CAP ASSY CACHIMBO DA VELA CONJ.	2					
20	97095–06014	BOLT PARAFUSO	2					
21	92995–06600	WASHER ARRUELA	2					
22	6AH–85542–00	BRACKET SUPORTE	1					
23	90464–07M56	CLAMP BRACADEIRA	2					
24	64J–82504–00	OIL PRESSURE SWITCH ASSY SENSOR DE PRESSAO DO OLEO	1					
25	62Y–84301–00	PILOT LIGHT ASSY 1 LUZ PILOTO CONJ. 1	1					
26	6H4–83589–00	GASKET GAXETA	1					
27	97885–06012	SCREW, PAN HEAD PARAFUSO	1					

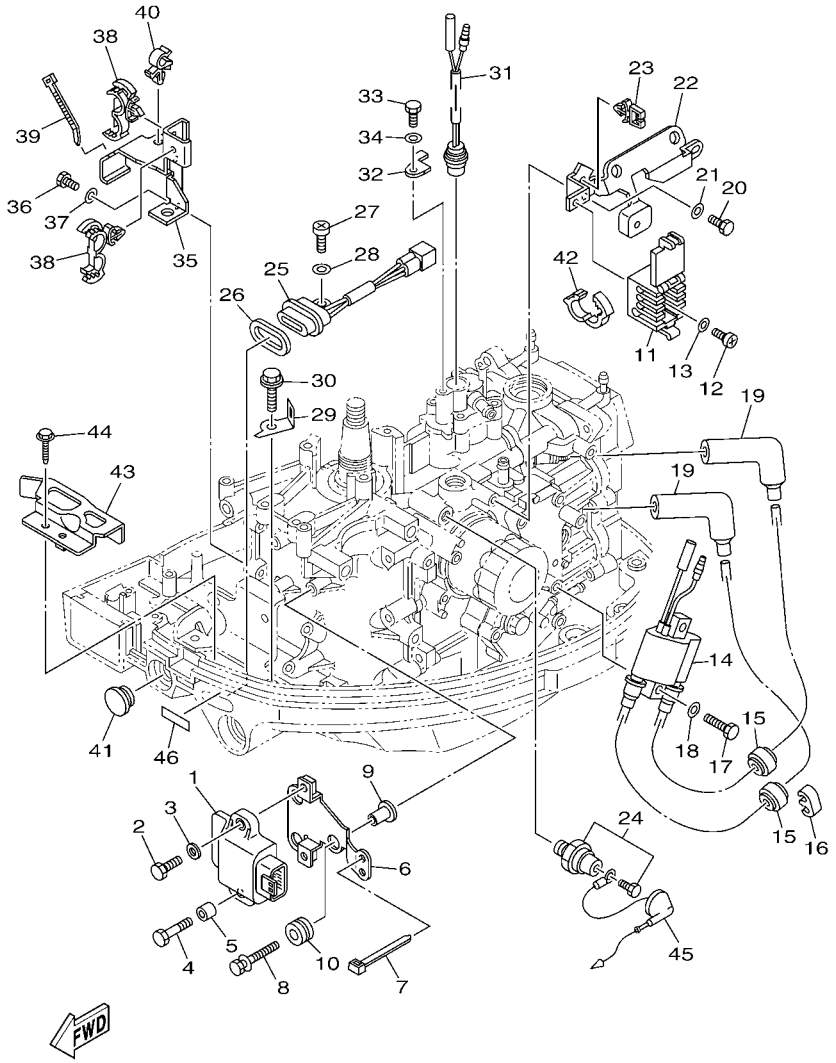

6CA8300-P130

FIG. 13 ELECTRICAL 1 — SISTEMA ELETRICO 1

REF. NO.	PART NO. No. PEÇA	DESCRIPTION DESCRIÇÃO	6BY9					REMARKS OBSERVAÇÕES
28	92995–06600	WASHER ARRUELA	1					
29	6AH–82388–00	PLATE PLACA	1					
30	90109–06M86	BOLT PARAFUSO	1					
31	6AH–82560–00	THERMO SWITCH ASSY INTERRUPTOR TERMICO CONJ.	1					
32	6AH–82588–00	PLATE PLACA	1					
33	97095–06014	BOLT PARAFUSO	1					
34	92995–06600	WASHER ARRUELA	1					
35	6AH–82554–00	STAY, NEUTRAL SWITCH FIXADOR DO INTERRUPTOR NEUTRO	1					
36	97095–06016	BOLT PARAFUSO	2					
37	92995–06600	WASHER ARRUELA	2					
38	90464–18246	CLAMP BRACADEIRA	2					
39	90465–13M18	CLAMP BRACADEIRA	1					
40	90464–10M32	CLAMP BRACADEIRA	1					
41	6G1–42725–00	GROMMET ILHO	1					
42	90464–16003	CLAMP BRACADEIRA	1					
43	6AH–82389–00	PLATE 2 PLACA 2	1					
44	90109–06M86	BOLT PARAFUSO	1					
45	6AH–82553–10	EXTENSION, WIRE LEAD EXTENSAO DO CHICOTE DE FIOS.	1					
46	67C–85415–00	MARK, SIGNAL LAMP ETIQUETA DE SINAL DA LAMPADA	1					

FIG. 14 ELECTRICAL 2 SISTEMA ELETRICO 2

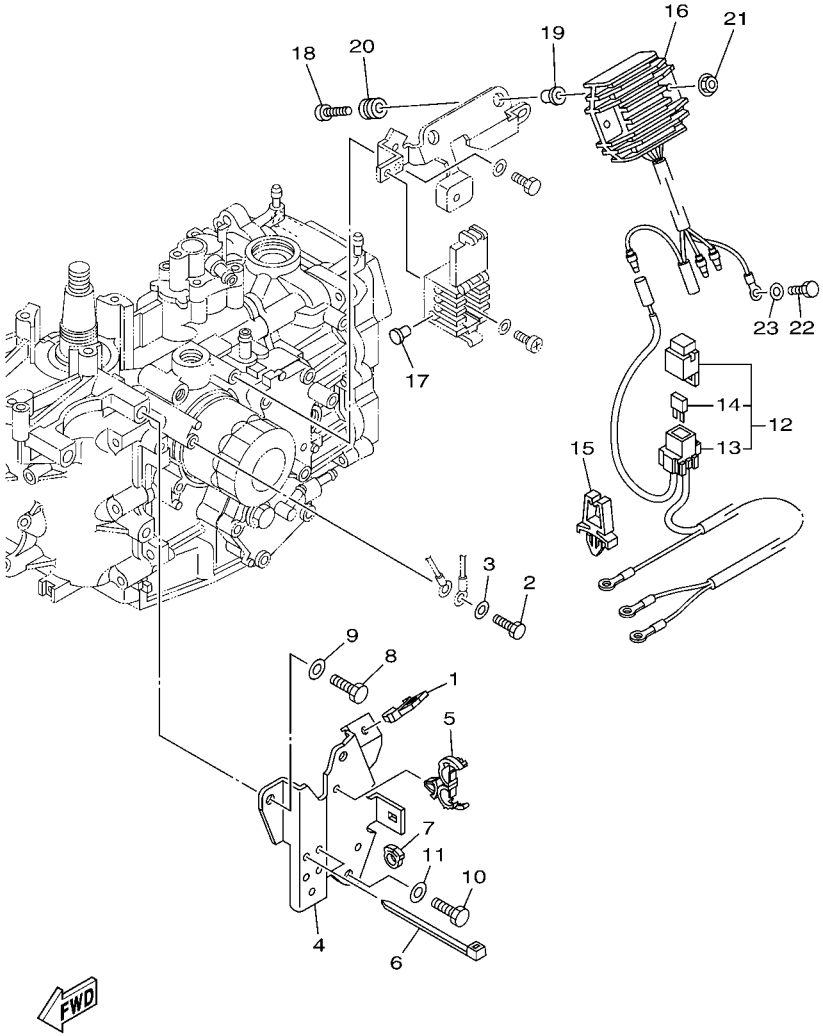

REF. NO.	PART NO. No. PEÇA	DESCRIPTION DESCRIÇÃO	6BY9					REMARKS OBSERVAÇÕES
1	90464–08004	CLAMP BRACADEIRA	1					
2	97095–06014	BOLT PARAFUSO	1					
3	92995–06600	WASHER ARRUELA	1					
4	6AH–82398–00	PLATE 3 PLACA 3	1					
5	90464–18246	CLAMP BRACADEIRA	1					
6	90465–13M18	CLAMP BRACADEIRA	3					
7	90464–09010	CLAMP BRACADEIRA	1					
8	97095–08025	BOLT PARAFUSO	2					
9	92995–08600	WASHER ARRUELA	2					
10	97095–08016	BOLT PARAFUSO	1					
11	92995–08600	WASHER ARRUELA	1					
12	6AH–81949–00	WIRE, LEAD CHICOTE DE FIOS	1					AP AP
13	67F–82151–00	.FUSE (20A) .FUSIVEL (20A)	2					
14	67F–8215B–00	.CAP (BLACK) .TAMPAO	1					
15	90464–06001	CLAMP BRACADEIRA	1					AP AP
16	6AH–81960–00	RECTIFIER & REGULATOR ASSY RETIFICADOR & REGULADOR CONJ.	1					AP AP
17	703–82119–00	COVER, LEAD WIRE TAMPA DO FIO DA BATERIA	1					AP AP
18	98980–06030	SCREW, BIND PARAFUSO	2					AP AP
19	90387–06M70	COLLAR ESPACADOR	2					AP AP
20	90480–13M24	GROMMET ILHO DE BORRACHA	2					AP AP
21	95780–06500	NUT, FLANGE PORCA FLANGE	2					AP AP
22	97095–06014	BOLT PARAFUSO	1					AP AP
23	92995–06600	WASHER ARRUELA	1					AP AP

FIG. 15 ELECTRICAL 3 SISTEMA ELETRICO 3

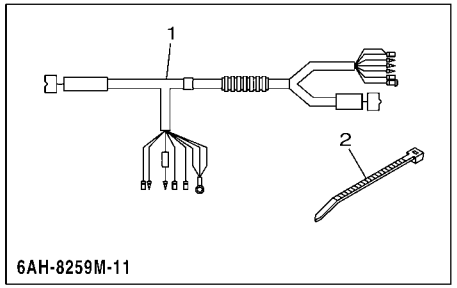

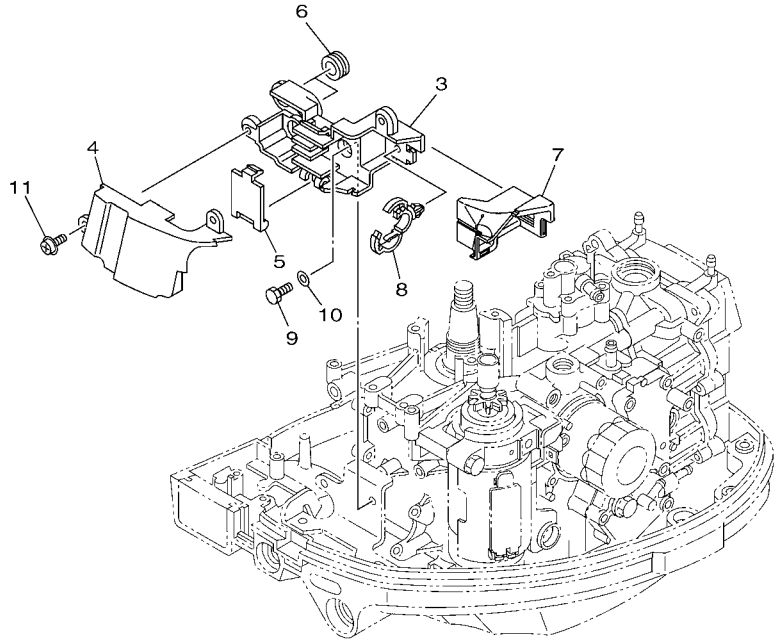

6AGA200-P150

REF. NO.	PART NO. No. PEÇA	DESCRIPTION DESCRIÇÃO	6BY9					REMARKS OBSERVAÇÕES
1	6AH–8259M–11	WIRE HARNESS ASSY 2 CHICOTE DE FIOS CONJ. 2	1					
2	90465–13M18	CLAMP BRACADEIRA	1					
3	6AH–8552A–00	HOUSING ALOJAMENTO	1					
4	6AH–8552E–00	COVER, CASE TAMPA DA CAIXA	1					
5	6AH–85537–00	COVER TAMPA	1					
6	90480–19368	GROMMET ILHO DE BORRACHA	2					
7	6AH–85547–00	DAMPER AMORTIZADOR	1					
8	90464–20181	CLAMP BRACADEIRA	1					
9	97095–06014	BOLT PARAFUSO	2					
10	92995–06600	WASHER ARRUELA	2					
11	97985–06214	SCREW, WITH WASHER PARAFUSO	2					

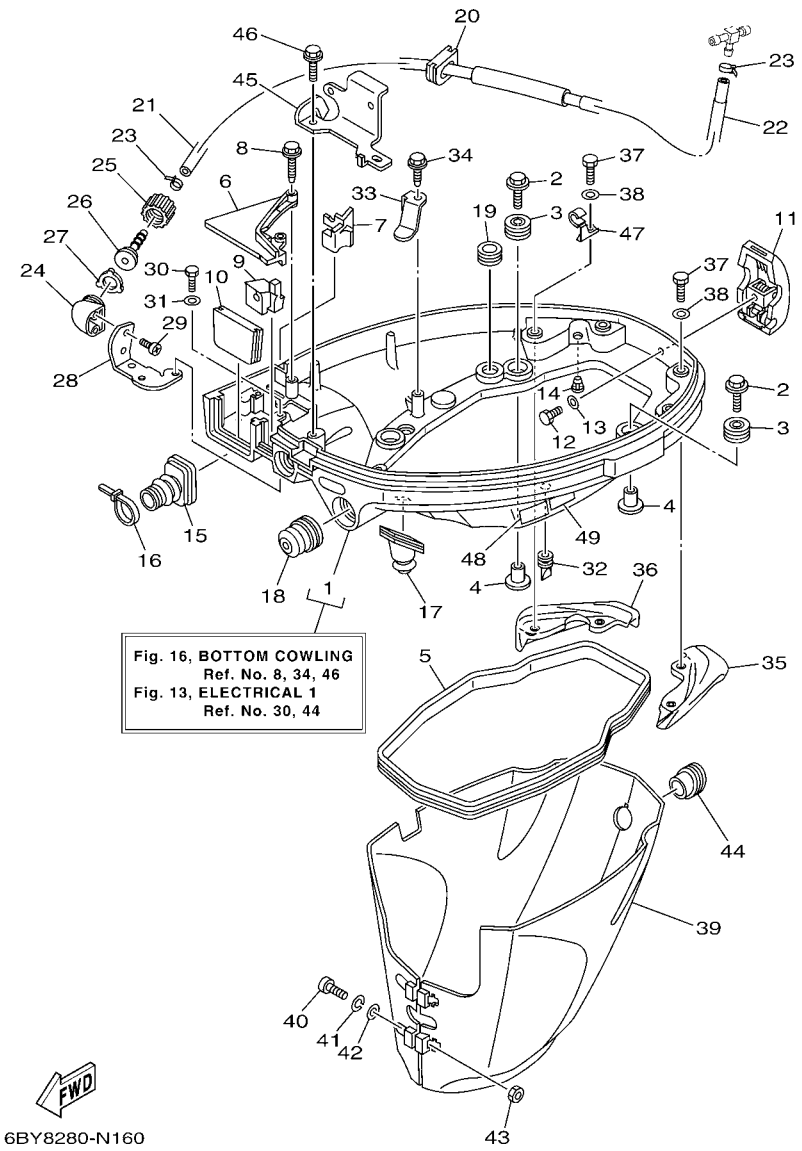

FIG. 16 BOTTOM COWLING — BANDEJA DO CAPO

REF. NO.	PART NO. No. PEÇA	DESCRIPTION DESCRIÇÃO	6BY9					REMARKS OBSERVAÇÕES
1	6AH–42710–00–4D	BOTTOM COWLING ASSY BASE DO CAPO CONJ.	1					
2	68F–85119–00	BOLT PARAFUSO	4					
3	90480–21M82	GROMMET ILHO DE BORRACHA	4					
4	90387–06176	COLLAR ESPACADOR	4					
5	6AH–42716–00	RUBBER, SEAL 1 BORRACHA DE VEDACAO 1	1					
6	6AH–42738–00–4D	PLATE, FITTING PLACA DA FIXADORA	1					
7	6AH–42718–00	RUBBER, SEAL 3 BORRACHA DE VEDACAO 3	1					
8	90109–06M82	BOLT PARAFUSO	2					
9	6AH–42725–00	GROMMET ILHO	1					
10	6AH–42724–00	GROMMET ILHO	1					
11	6AH–42801–00	COWLING CLAMP COMP. GRAMPO DA CARENAGEM COMP.	1					
12	97095–06012	BOLT PARAFUSO	1					
13	92995–06600	WASHER ARRUELA	1					
14	6BL–44391–00	NIPPLE, HOSE JUNCAO DO TUBO	1					
15	6AH–26326–00	GROMMET ILHO	1					
16	90465–11M10	CLAMP BRACADEIRA	1					
17	6AH–42727–00	GROMMET ILHO	1					
18	65W–42726–00	GROMMET ILHO	1					
19	90480–16007	GROMMET ILHO DE BORRACHA	1					
20	6AH–42726–00	GROMMET ILHO	1					
21	6AH–24314–01	PIPE 4 TUBO 4	1					
22	90445–15003	HOSE (L230) TUBO (L230)	1					
23	90465–11M10	CLAMP BRACADEIRA	2					
24	6DR–12572–00	ADAPTER ADAPTADOR	1					
25	6R3–12581–00	JOINT, HOSE 1 JUNCAO DA MANGUEIRA 1	1					
26	6R3–12582–00	JOINT, HOSE 2 JUNCAO DA MANGUEIRA 2	1					
27	6R3–12583–00	GASKET, HOSE JOINT GAXETA DA JUNCAO DA MANGUEIRA	1					

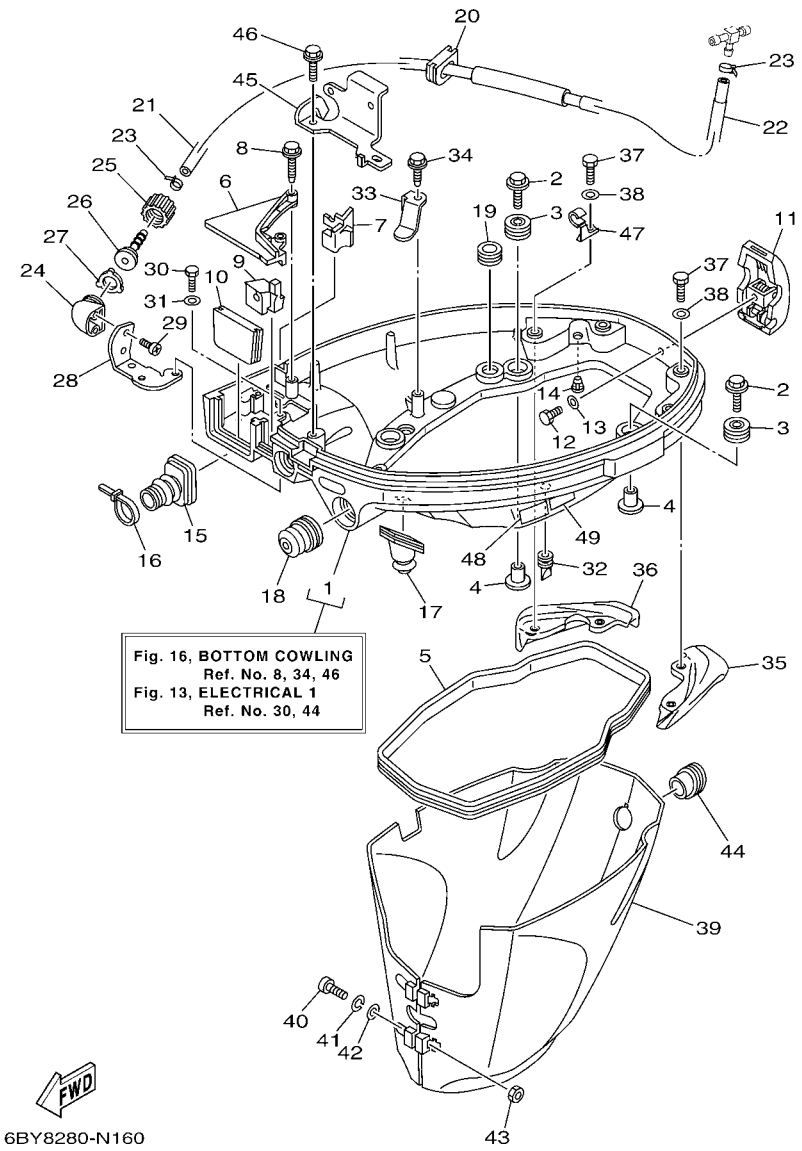

FIG. 16 BOTTOM COWLING — BANDEJA DO CAPO

REF. NO.	PART NO. No. PEÇA	DESCRIPTION DESCRIÇÃO	6BY9					REMARKS OBSERVAÇÕES
28	6AH–12535–00	PLATE PLACA	1					
29	90167–06002	SCREW, TAPPING PARAFUSO	2					
30	97095–06010	BOLT PARAFUSO	2					
31	92995–06600	WASHER ARRUELA	2					
32	65W–42717–00	RUBBER, SEAL 2 BORRACHA DE VEDACAO 2	2					
33	6AH–42743–00	BRACKET SUPORTE	1					
34	90109–06M86	BOLT PARAFUSO	1					
35	6AH–42761–A0	STOPPER LIMITADOR	1					
36	6AH–42762–A0	STOPPER LIMITADOR	1					
37	97075–06012	BOLT PARAFUSO	4					
38	92995–06600	WASHER ARRUELA	4					
39	6AH–42741–00	APRON ABA	1					
40	97885–06030	SCREW, PAN HEAD PARAFUSO	2					
41	92995–06100	WASHER, SPRING ARRUELA COM MOLA	2					
42	92995–06600	WASHER ARRUELA	2					
43	95380–06600	NUT, HEXAGON PORCA SEXTAVADA	2					
44	6AH–42717–00	RUBBER, SEAL 2 BORRACHA DE VEDACAO 2	1					
45	6AH–15774–00	STAY 4 FIXADOR 4	1					
46	90109–06M86	BOLT PARAFUSO	1					
47	90465–08M82	CLAMP BRACADEIRA	1					
48	6AH–42794–70	LABEL, WARNING (GENERAL) ETIQUETA ADVERTENCIA	1					
49	4VW–F111M–04	LABEL, MADE IN ETIQUETA DE FABRICACAO LOCAL	1					

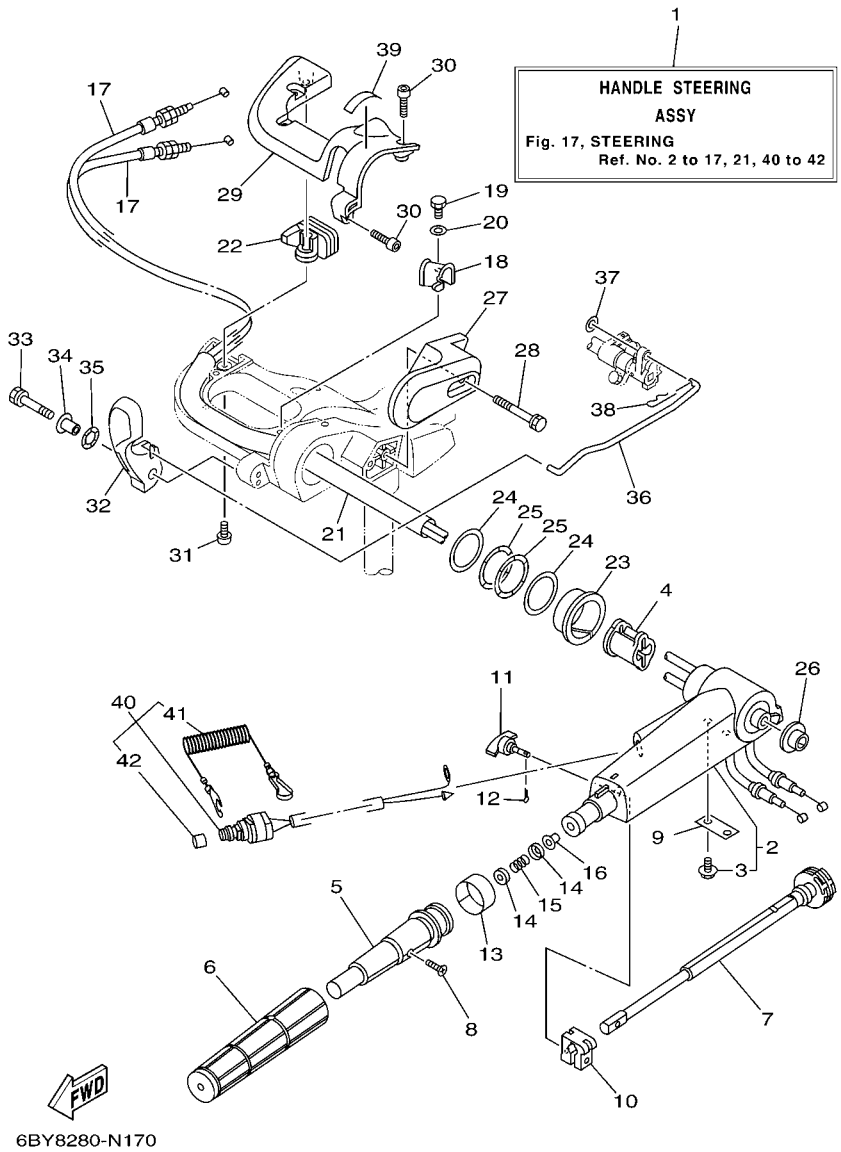

FIG. 17 STEERING DIRECAO

REF. NO.	PART NO. No. PEÇA	DESCRIPTION DESCRIÇÃO	6BY9					REMARKS OBSERVAÇÕES
1	6AH–W0084–03–4D	HANDLE STEERING ASSY ALAVANCA DA DIRECAO CONJ.	1					
2	6AH–42101–02–4D	HANDLE, STEERING ALAVANCA DE DIRECIONAL	1					
3	90109–06M86	.BOLT .PARAFUSO	2					
4	6AH–26288–00	GROMMET, CABLE ILHO DE CABOS	1					
5	66M–42119–01	GRIP, STEERING HANDLE MANOPLA DA ALAVANCA DIRECIONAL	1					
6	67D–42177–00	RUBBER, HANDLE BORRACHA DO GUIDAO	1					
7	65W–42138–00	LEVER, THROTTLE ALAVANCA DE ACELERACAO	1					
8	90152–05011	SCREW, COUNTERSUNK PARAFUSO TRAMBULADOR	1					
9	65W–42159–00	STAY FIXADOR	1					
10	6G1–42126–00	FRICTION, STEERING HANDLE GRIP FRICCAO DIRECIONAL	1					
11	65W–42125–00	BOLT, FRICTION ADJUSTING PARAFUSO DE AJUSTE DA FRICCAO	1					
12	91490–16010	PIN. COTTER CONTRAPINO	1					
13	6J0–42137–10	INDICATOR, THROTTLE INDICADOR DE ACELERACAO	1					
14	6X4–44188–00	WASHER ARRUELA	2					
15	90501–23215	SPRING, COMPRESSION MOLA DE COMPRESSAO	1					
16	90386–08004	BUSH BUCHA	1					
17	6AH–26311–00	CABLE, THROTTLE 1 CABO DO ACELERADOR 1	2					
18	6AH–44554–00	PLATE PLACA	1					
19	97095–06014	BOLT PARAFUSO	1					
20	92995–06600	WASHER ARRUELA	1					
21	6AH–2634E–00	PROTECTOR 1 PROTETOR 1	1					
22	6AH–42551–00	GROMMET ILHO DE BORRACHA	1					
23	90386–45001	BUSH BUCHA	1					
24	90201–39008	WASHER, PLATE ARRUELA PLANA	2					
25	90206–39001	WASHER, WAVE ARRUELA ONDULADA	2					
26	90381–20001	BUSH, SOLID BUCHA SOLIDA	1					
27	6AH–42131–00–4D	COVER, HANDLE STEERING TAMPA DA ALAVANCA DIRECIONAL	1					

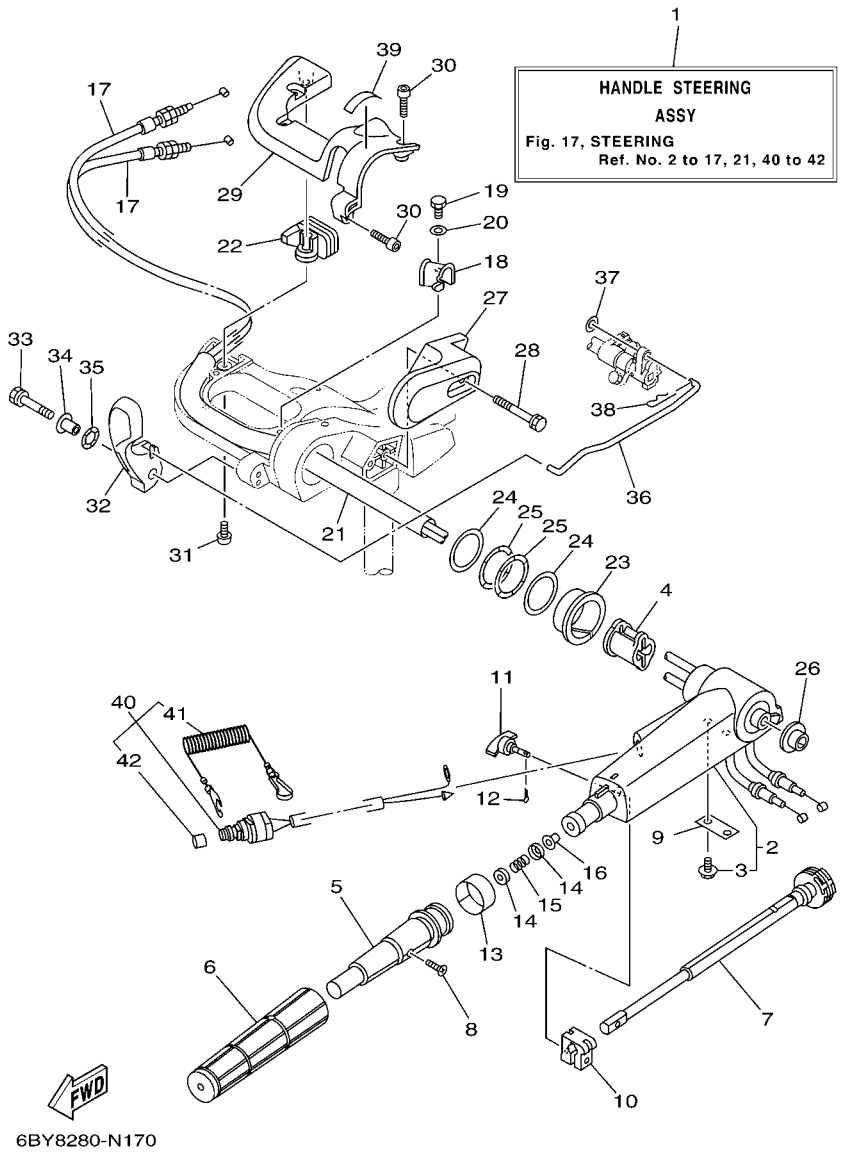

FIG. 17 STEERING DIRECAO

REF. NO.	PART NO. No. PEÇA	DESCRIPTION DESCRIÇÃO	6BY9					REMARKS OBSERVAÇÕES
28	97595–06555	BOLT, WITH WASHER PARAFUSO COM ARRUELA	2					
29	6AH–42532–A0	COVER TAMPA	1					
30	90111–06072	BOLT,HEX. SOCKET BUTTON PARAFUSO	4					
31	97780–60520	SCREW, TAPPING PARAFUSO	1					
32	6AH–44111–00	HANDLE, GEAR SHIFT ALAVANCA DE MUDANCA	1					
33	90119–06M05	BOLT, WITH WASHER PARAFUSO COM ARRUELA	1					
34	90387–06M86	COLLAR ESPACADOR	1					
35	90206–15M18	WASHER, WAVE ARRUELA ONDULADA	1					
36	6AH–44124–00	LINK, SHIFT ROD ARGOLA DA HASTE DE MUDANCA	1					
37	92990–06200	WASHER, PLAIN ARRUELA PLANA	1					
38	90468–18008	CLIP PRESILHA	1					
39	6X3–44191–00	INDICATOR, SHIFT INDICADOR DE MUDANCA	1					
40	6AH–82575–00	ENGINE STOP SWITCH ASSY INTERRUPTOR DE PARADA CJ.	1					
41	682–82556–00	.LANYARD, STOP SWITCH .PULSEIRA DE PARADA AUTOMATICA	1					
42	689–8257Y–00	.CAP .CAPA	1					

FIG. 18 STEERING FRICTION FRICCAO DA DIRECAO

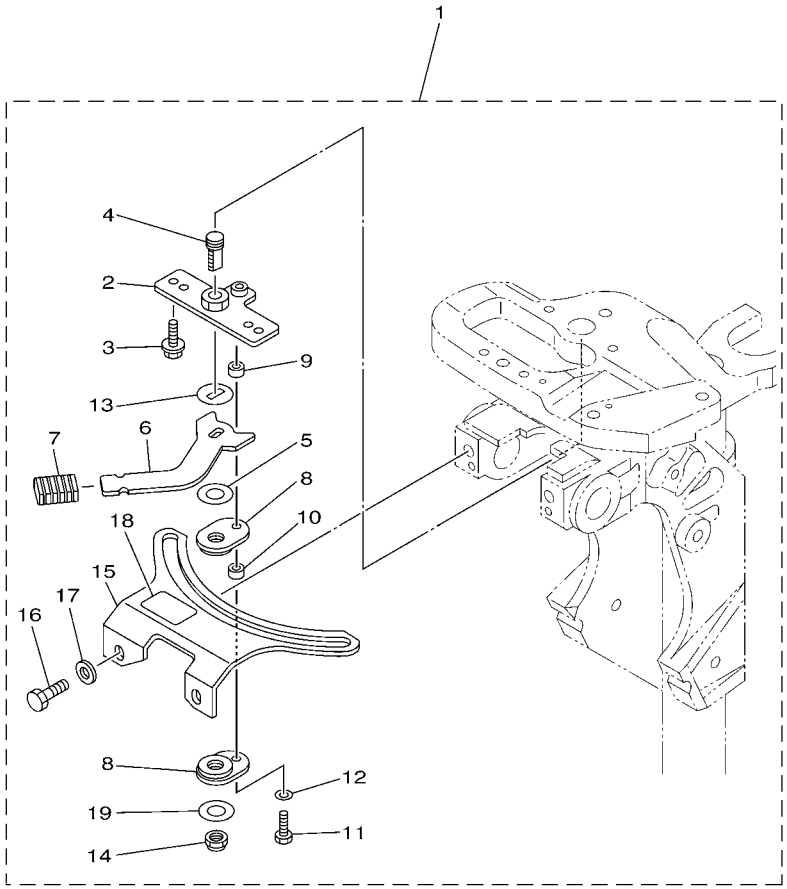

6AU5110-L180

REF. NO.	PART NO. No. PEÇA	DESCRIPTION DESCRIÇÃO	6BY9					REMARKS OBSERVAÇÕES
1	6AH–42508–01	STEERING FRICTION ASSY DIRECIONADOR DE FRICCAO	1					
2	68T–42525–01	.PLATE, FRICTION .PLACA DE FRICCAO	1					
3	90119–05018	.BOLT, WITH WASHER .PARAFUSO COM ARRUELA	2					
4	67C–42562–00	.SHAFT, STEERING LOCK .EIXO TRAVA DO DIRECIONAL	1					
5	90202–10M56	.WASHER, PLATE .ARRUELA PLANA	1					
6	68T–42561–00	.KNOB, STEERING LOCK .BOTAO DA TRAVA DO DIRECIONADOR	1					
7	689–43633–00	.COVER, TILT LEVER .CAPA DA ALAVANCA DE INCLINACAO	1					
8	65W–42528–00	.PLATE, FRICTION .PLACA DE FRICCAO	2					
9	90387–05053	.COLLAR .ESPACADOR	1					
10	90387–05054	.COLLAR .ESPACADOR	1					
11	97095–05020	.BOLT .PARAFUSO	1					
12	92995–05600	.WASHER .ARRUELA	1					
13	90209–10M26	.WASHER .ARRUELA	1					
14	90185–10M14	.NUT, SELF-LOCKING .PORCA AUTOTRAVANTE	1					
15	6AH–42527–00	.PLATE, FRICTION .PLACA DE FRICCAO	1					
16	90101–08022	.BOLT .PARAFUSO	2					
17	90201–08065	.WASHER, PLATE .ARRUELA PLANA	2					
18	68T–43155–00	.MARK 1 .MARCA (EMBLEMA) 1	1					
19	90201–106M5	.WASHER, PLATE .ARRUELA PLANA	1					

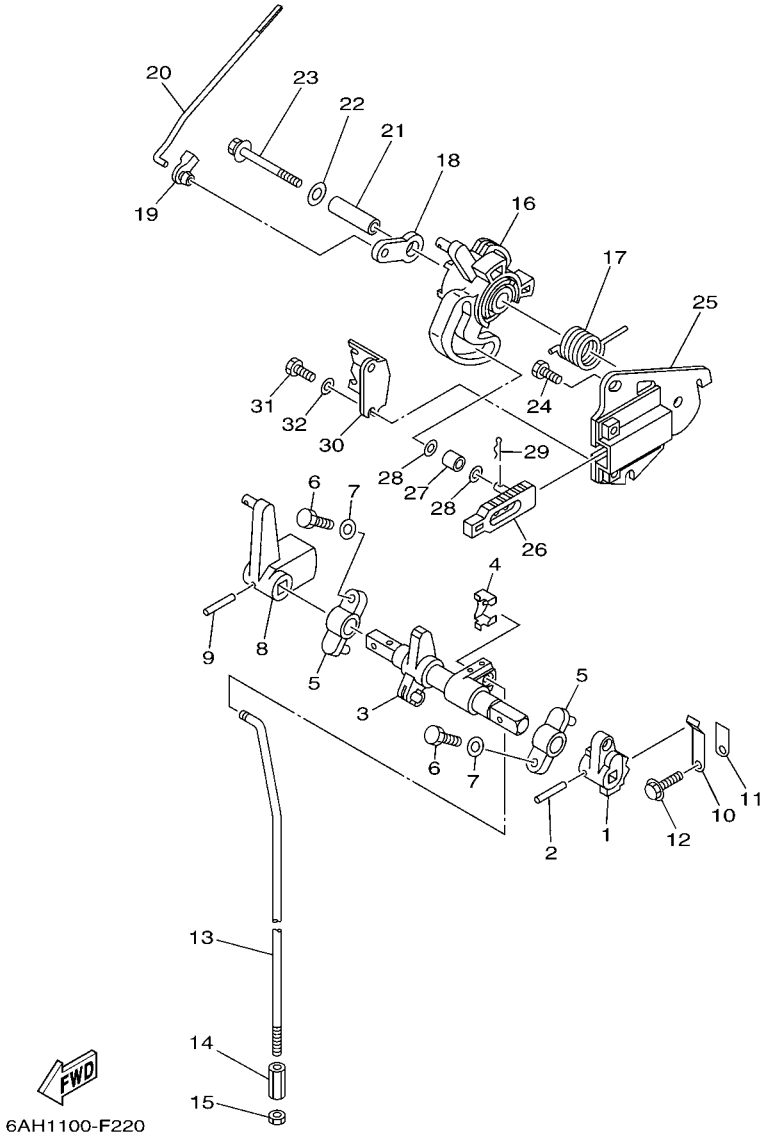

FIG. 19 CONTROL — CONTROLE

REF. NO.	PART NO. No. PEÇA	DESCRIPTION DESCRIÇÃO	6BY9					REMARKS OBSERVAÇÕES
1	6AH–44123–00	ARM, SHIFT ROD BRACO DA HASTE DE MUDANCA	1					
2	90254–03M05	PIN, SPRING PINO MOLA	1					
3	6AH–44121–01	LEVER, SHIFT ROD ALAVANCA DA HASTE DE MUDANCA	1					
4	6AH–26364–00	END, CABLE 2 TERMINAL DO CABO 2	1					
5	6G1–41662–01–94	BRACKET 2 SUPORTE 2	2					
6	97095–06020	BOLT PARAFUSO	2					
7	92995–06600	WASHER ARRUELA	2					
8	6AH–44125–00	LEVER, SHIFT ROD ALAVANCA DA HASTE DE MUDANCA	1					
9	90254–03M05	PIN, SPRING PINO MOLA	1					
10	65W–44116–00	SPRING MOLA	1					
11	66R–44114–00	STOPPER LIMITADOR	1					
12	95895–06014	BOLT, FLANGE PARAFUSO FLANGE	1					
13	6AH–44143–00	ROD, SHIFT HASTE DE MUDANCA	1					S(17.1") S(17.1")
14	90170–06015	NUT PORCA	1					
15	95380–06700	NUT PORCA	1					
16	6AH–41638–00	PULLEY POLIA	1					
17	90508–20M44	SPRING, TORSION MOLA DE TORCAO	1					
18	65W–41283–00	LEVER, FREE ACCEL. ALAVANCA DE ACELERACAO	1					
19	6J8–41262–00	JOINT, CHOKE LEVER JUNCAO DA ALAVANCA DO AFOGADOR	1					
20	6AH–41211–00	LINK, ACCEL. ARTICULADOR DO ACELERADOR	1					
21	90387–06139	COLLAR ESPACADOR	1					
22	90201–06M31	WASHER, PLATE ARRUELA PLANA	1					
23	97595–06555	BOLT, WITH WASHER PARAFUSO COM ARRUELA	1					
24	97095–06014	BOLT PARAFUSO	2					
25	6AH–14571–00	BRACKET, THROTTLE SUPORTE DO ACELERADOR	1					
26	6AH–44167–10	PLUNGER, SHIFT CAM AFOGADOR DO CAME DE MUDANCA	1					
27	62Y–42171–00	BUSHING BUCHA	1					

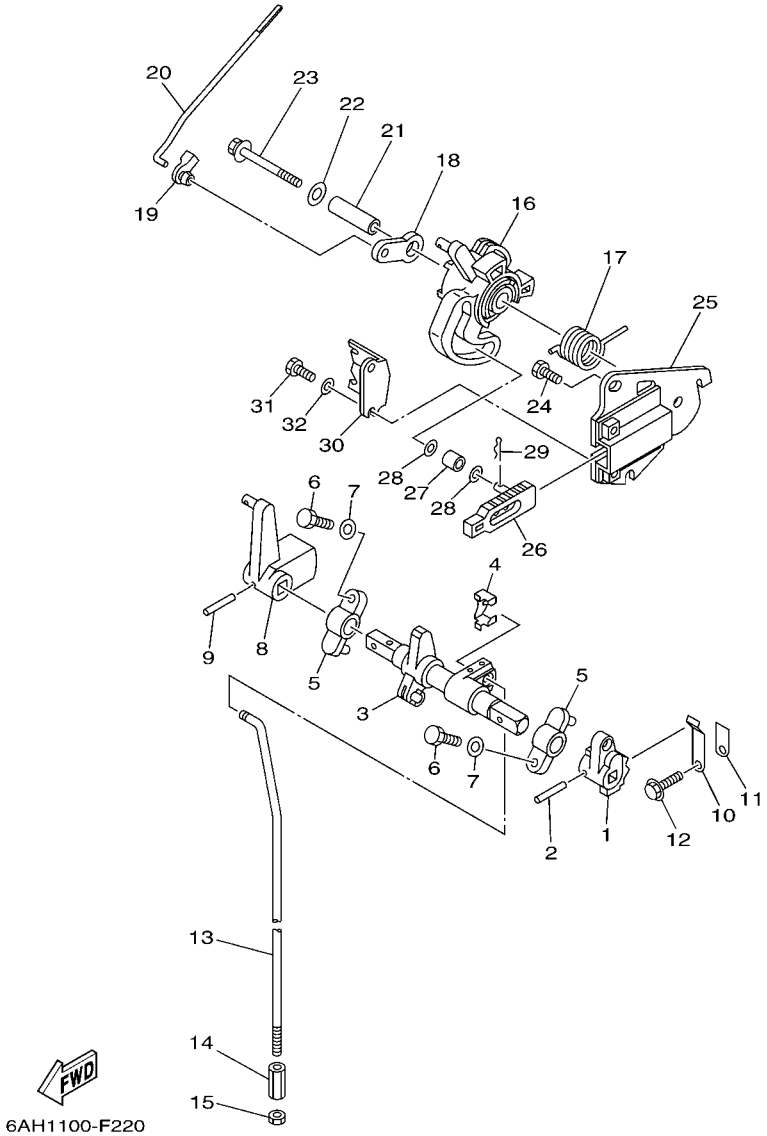

FIG. 19 CONTROL — CONTROLE

REF. NO.	PART NO. No. PEÇA	DESCRIPTION DESCRIÇÃO	6BY9					REMARKS OBSERVAÇÕES
28	90201–05M04	WASHER, PLATE ARRUELA PLANA	2					
29	90468–10005	CLIP PRESILHA	1					
30	6AH–14497–00	STAY, THROTTLE WIRE SUPORTE DO CABO DE ACELERACAO	1					
31	97095–06014	BOLT PARAFUSO	2					
32	92995–06600	WASHER ARRUELA	2					

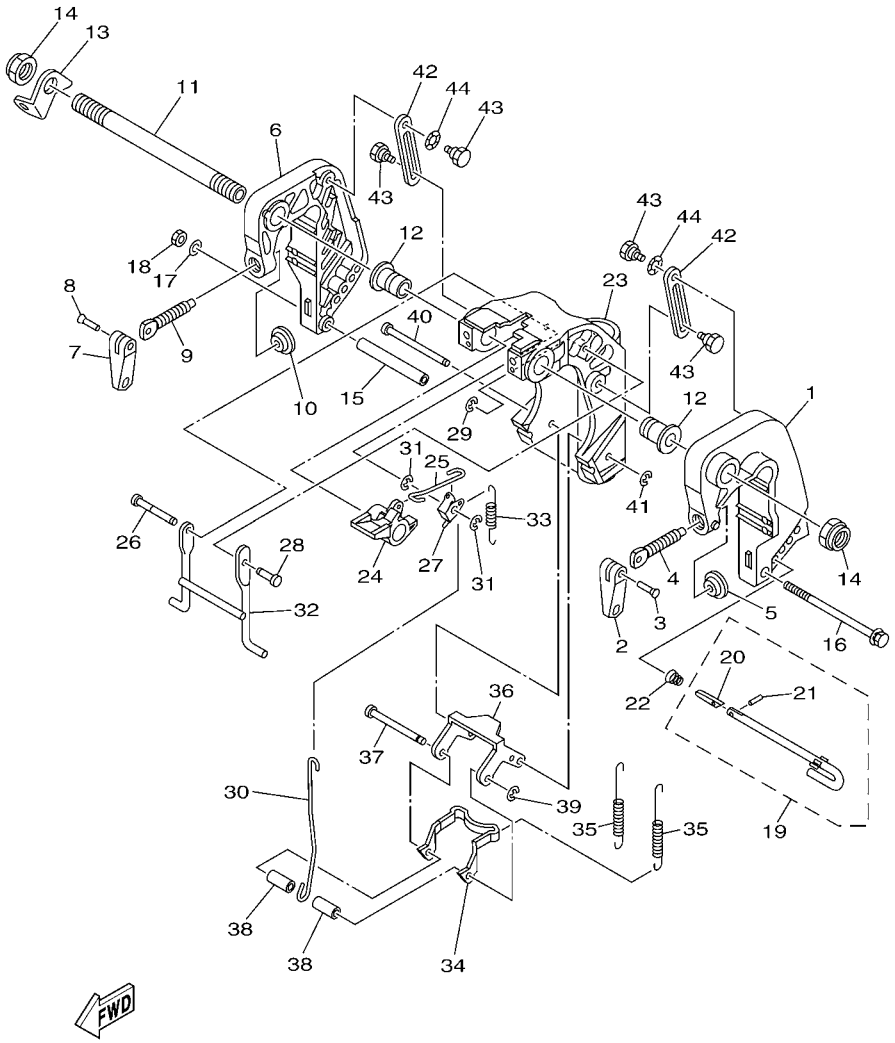

FIG. 20 BRACKET 1 SUPORTE 1

REF. NO.	PART NO. No. PEÇA	DESCRIPTION DESCRIÇÃO	6BY9					REMARKS OBSERVAÇÕES
1	6AH–43111–00–4D	BRACKET, CLAMP 1 SUPORTE DA BRACADEIRA 1	1					
2	6E0–43118–01	HANDLE, TRANSOM CLAMP ALAVANCA DE FIXACAO	1					
3	90243–04M01	PIN PINO	1					
4	6E7–43116–00	SCREW, TRANSOM CLAMP PARAFUSO DE ACO DA ALAVANCA	1					
5	648–43114–01	PAD, TRANSOM CLAMP PASTILHA DE TRANSMISSAO	1					
6	6AH–43112–00–4D	BRACKET, CLAMP 2 SUPORTE DA BRACADEIRA 2	1					
7	6E0–43118–01	HANDLE, TRANSOM CLAMP ALAVANCA DE FIXACAO	1					
8	90243–04M01	PIN PINO	1					
9	6E7–43116–00	SCREW, TRANSOM CLAMP PARAFUSO DE ACO DA ALAVANCA	1					
10	648–43114–01	PAD, TRANSOM CLAMP PASTILHA DE TRANSMISSAO	1					
11	69A–43131–00	BOLT, CLAMP BRACKET PARAFUSO DE ACO	1					FOR REMOTE CONTROL FOR REMOTE CONTROL
12	90386–22MA4	BUSH BUCHA	2					
13	66R–43113–00	PLATE, CLAMP BRACKET PLACA DE SUPORTE DA BRACADEIRA	1					
14	90185–22043	NUT, SELF-LOCKING PORCA AUTOTRAVANTE	2					
15	90387–06M13	COLLAR ESPACADOR	1					
16	90101–06M18	BOLT PARAFUSO	1					
17	92995–06600	WASHER ARRUELA	1					
18	95380–06700	NUT PORCA	1					
19	6L2–43160–01	TILT ROD ASSY BARRA INCLINADA CONJ	1					
20	689–43165–00	.PLATE, TILT LOCK .PLACA DA BARRA INCLINADA	1					
21	91690–30008	.PIN, SPRING .PINO MOLA	1					
22	90502–10M07	SPRING, CONICAL MOLA CONICA	1					
23	6AH–43311–00–4D	BRACKET, SWIVEL 1 SUPORTE DO EIXO GIRATORIO	1					S(17.1") S(17.1")
24	6DR–43631–00	LEVER, TILT ALAVANCA DE INCLINACAO	1					
25	6DR–43616–00	ROD, TILT LOCK HASTE DE FIXADOR DE INCLINACAO	1					
26	6AH–43646–10	SHAFT, LEVER ALAVANCA DO EIXO	1					
27	6DR–43641–00	LEVER, TILT ALAVANCA DE INCLINACAO	1					

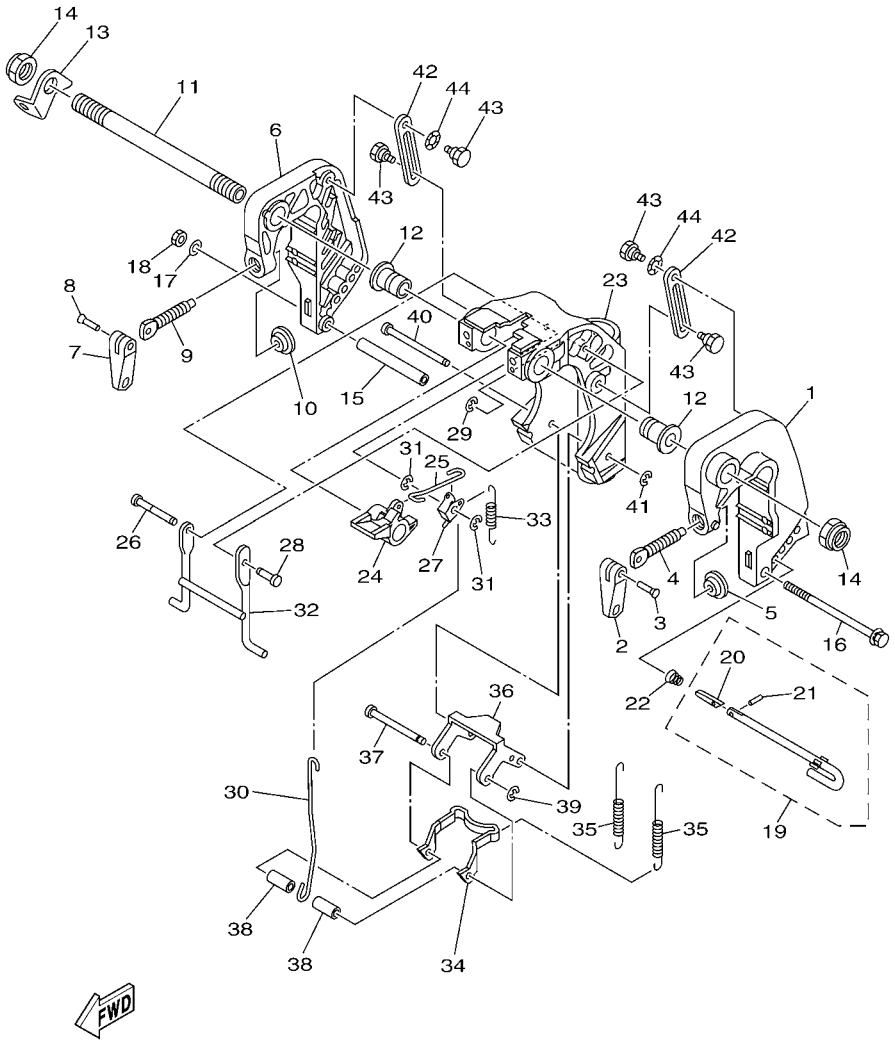

FIG. 20 BRACKET 1 SUPORTE 1

REF. NO.	PART NO. No. PEÇA	DESCRIPTION DESCRIÇÃO	6BY9					REMARKS OBSERVAÇÕES
28	6AH–43191–10	SHAFT, STOPPER EIXO LIMITADOR	1					
29	99080–05600	CIRCLIP ANEL TRAVA	1					
30	6AH–43617–00	ROD, TILT LOCK HASTE DE FIXADOR DE INCLINACAO	1					
31	99080–05600	CIRCLIP ANEL TRAVA	2					
32	6AH–43350–00	RECEIVER ASSY ADAPTADOR DE RECEBIMENTO CJ.	1					
33	90506–18014	SPRING, TENSION MOLA DE TENSAO	1					
34	6AH–43614–00	PLATE, TILT LOCK PLACA DE FIXADOR DE INCLINACAO	1					
35	90506–20020	SPRING, TENSION MOLA DE TENSAO	2					
36	6AH–43615–00	PLATE, TILT LOCK PLACA DE FIXADOR DE INCLINACAO	1					
37	68T–43611–00	SHAFT, TILT LOCK EIXO DE FIXADOR DE INCLINACAO	1					
38	90387–06138	COLLAR ESPACADOR	2					
39	93430–04M03	CIRCLIP ANEL TRAVA	1					
40	68T–43659–00	SHAFT, REVERSE LOCK EIXO DA TRAVA REVERSAO	1					
41	99080–05600	CIRCLIP ANEL TRAVA	1					
42	6AH–43627–00	STOPPER LIMITADOR	2					
43	90109–06M84	BOLT PARAFUSO	4					
44	90206–10M24	WASHER, WAVE ARRUELA ONDULADA	2					

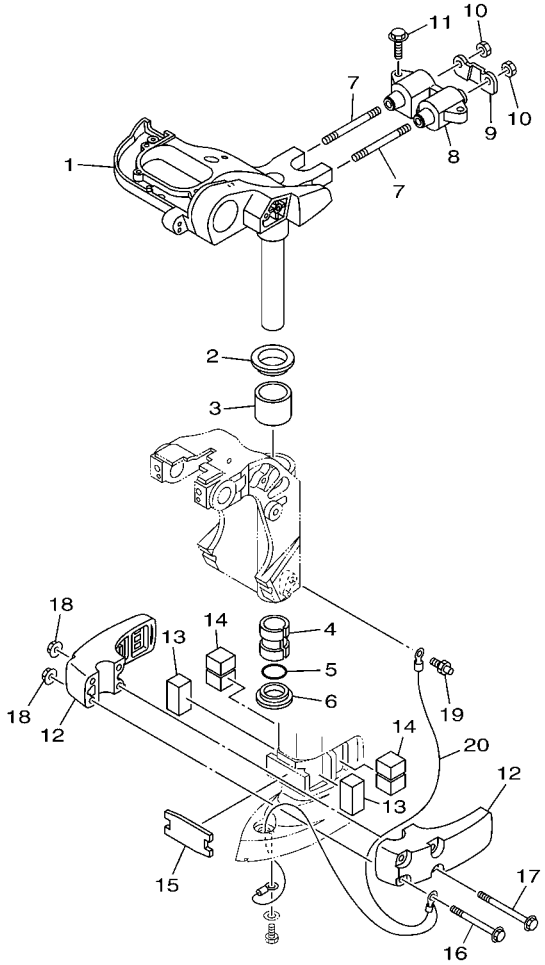

6AH2200-G200

FIG. 21 BRACKET 2 SUPORTE 2

REF. NO.	PART NO. No. PEÇA	DESCRIPTION DESCRIÇÃO	6BY9					REMARKS OBSERVAÇÕES
1	6AH–42510–00–4D	STEERING BRACKET ASSY SUPORTE DIRECIONAL CONJ.	1					S(17.1") S(17.1")
2	90209–40008	WASHER ARRUELA	1					
3	90386–40001	BUSH BUCHA	1					
4	90386–30048	BUSH BUCHA	1					
5	93210–29M94	O-RING ANEL DE BORRACHA	1					
6	90386–30M60	BUSH BUCHA	1					
7	90116–10033	BOLT, STUD PRISIONEIRO	2					
8	6AH–44514–00	MOUNT DAMPER, UPPER SIDE AMORTIZADOR SUPERIOR	1					
9	6AH–44526–00	PLATE PLACA	1					
10	95380–10600	NUT PORCA	2					
11	90119–08094	BOLT, WITH WASHER PARAFUSO COM ARRUELA	2					
12	6AH–44551–A0–4D	HOUSING, LOWER MOUNT RUBBER 1 ALOJAMENTO DO SUPORTE INFERIOR	2					
13	6AH–44557–00	MOUNT DAMPER, LOWER FRONT AMORTIZADOR INFERIOR	2					
14	6AH–44555–00	MOUNT DAMPER, LOWER SIDE AMORTIZADOR INFERIOR	2					
15	6AH–44574–00	STOPPER, LOWER MOUNT RUBBER LIMITADOR INFERIOR DE MONTAGEM	1					
16	90119–08M45	BOLT, WITH WASHER PARAFUSO COM ARRUELA	2					
17	90119–08M46	BOLT, WITH WASHER PARAFUSO COM ARRUELA	2					
18	90179–08M34	NUT PORCA	4					
19	93700–06M03	NIPPLE, GREASE NIPLE DE GRAXA	1					
20	6AH–82127–00	WIRE, LEAD 2 FIO CONDUTOR 2	1					

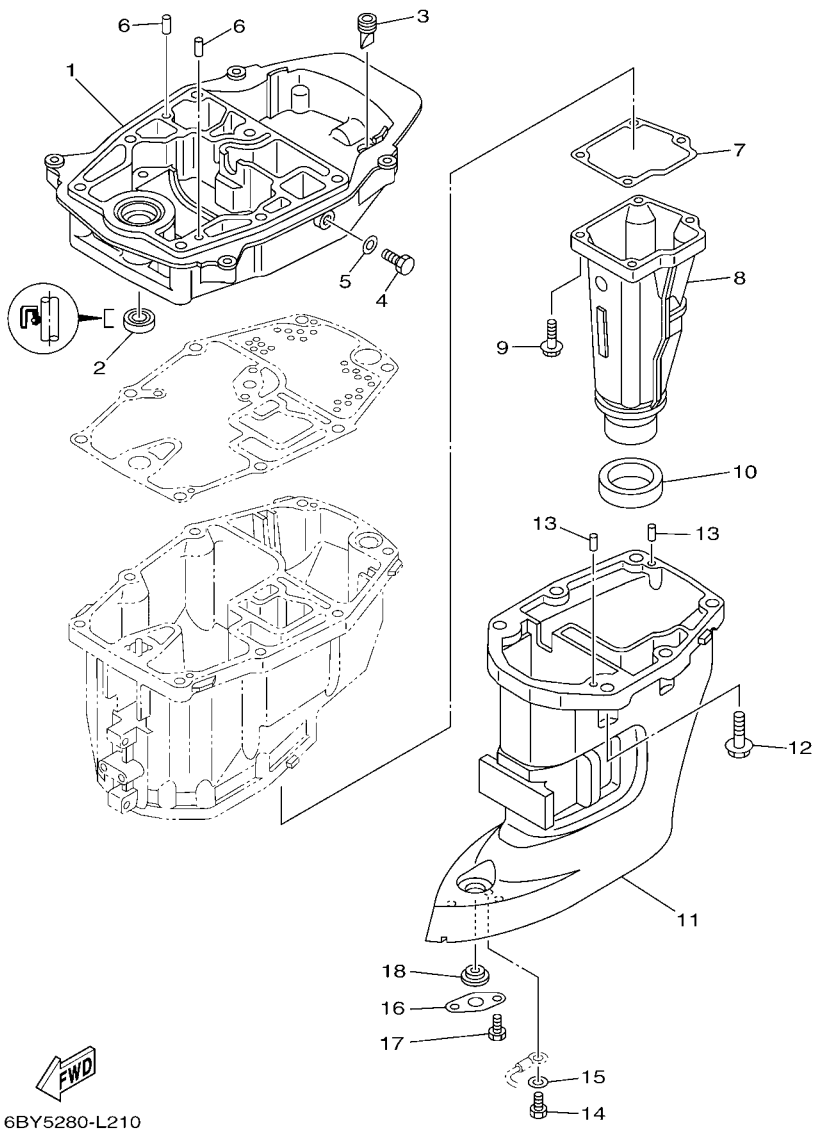

FIG. 22 UPPER CASING CAPA INFERIOR

REF. NO.	PART NO. No. PEÇA	DESCRIPTION DESCRIÇÃO	6BY9					REMARKS OBSERVAÇÕES
1	6AH–41137–00–CA	GUIDE, EXHAUST GUIA DO ESCAPE	1					
2	93101–12M63	OIL SEAL RETENTOR DE OLEO	1					
3	65W–42717–00	RUBBER, SEAL 2 BORRACHA DE VEDACAO 2	1					
4	97095–08014	BOLT PARAFUSO	1					
5	90430–08143	GASKET GAXETA	1					
6	93606–19M23	PIN, DOWEL PINO GUIA	2					
7	6AH–41134–00	GASKET, EXHAUST MANIFOLD GAXETA DO MULTIPLO DE ESCAPE	1					
8	6AH–14711–00–CA	MUFFLER 1 SILENCIADOR 1	1					S(17.1") S(17.1")
9	97575–06525	BOLT, WITH WASHER PARAFUSO COM ARRUELA	4					
10	6AH–41138–00	SEAL, EXT. 1 VEDACAO DO ESCAPE 1	1					
11	6AH–45111–00–4D	CASING, UPPER CAIXA SUPERIOR	1					S(17.1") S(17.1")
12	97575–08530	BOLT, WITH WASHER PARAFUSO COM ARRUELA	6					
13	93604–12M07	PIN, DOWEL PINO GUIA	2					
14	97095–05010	BOLT PARAFUSO	1					
15	92995–05600	WASHER ARRUELA	1					
16	68T–45321–00	PLATE PLACA	1					
17	97095–06008	BOLT PARAFUSO	1					
18	90480–14M54	GROMMET ILHO DE BORRACHA	1					

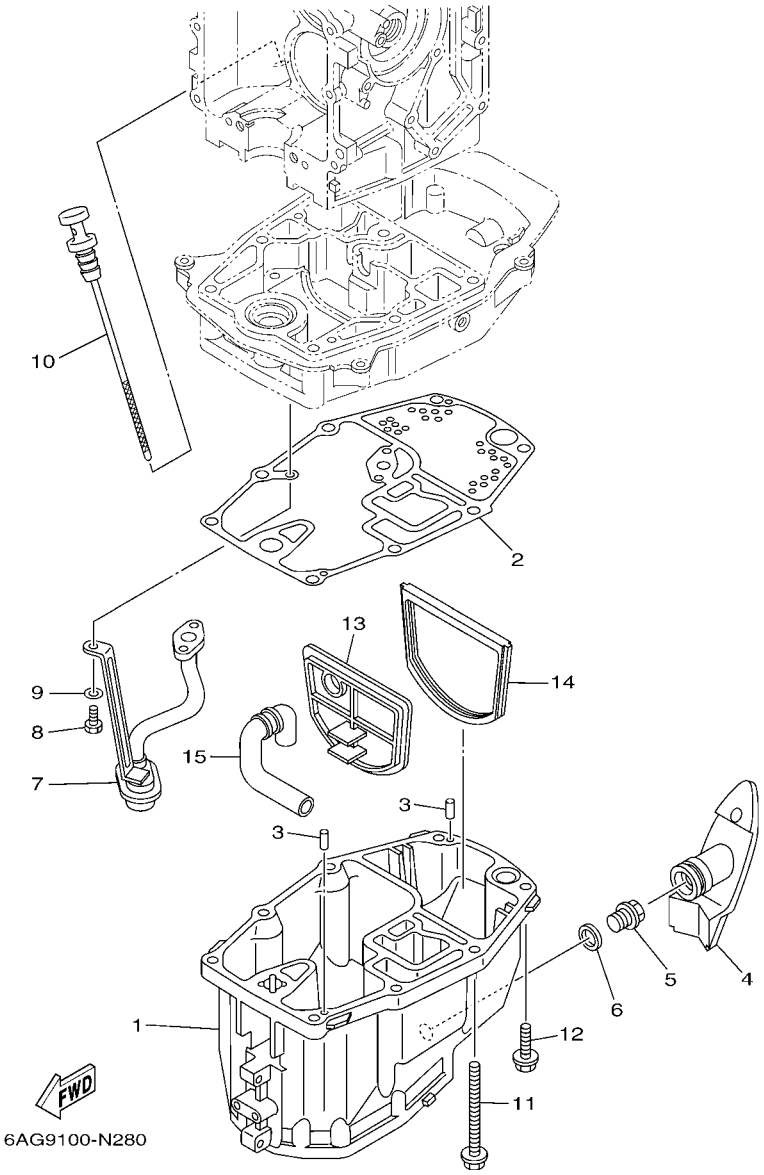

FIG. 23 OIL PAN — BANDEJA DE OLEO

REF. NO.	PART NO. No. PEÇA	DESCRIPTION DESCRIÇÃO	6BY9					REMARKS OBSERVAÇÕES
1	6AH–15311–00–CA	OIL PAN CARTER DO OLEO	1					
2	6AH–15312–10	GASKET, OIL PAN GAXETA DA CAPA DO OLEO	1					
3	93604–12M07	PIN, DOWEL PINO GUIA	2					
4	6AH–15316–00	DAMPER 1 AMORTIZADOR 1	1					
5	90340–14M06	PLUG, STRAIGHT SCREW TAMPAO DO DRENO	1					
6	90430–14M09	GASKET GAXETA	1					
7	6AH–13411–00	STRAINER, OIL FILTRADOR DE OLEO	1					
8	97013–06016	BOLT PARAFUSO	3					
9	92903–06600	WASHER, PLATE ARRUELA PLANA	3					
10	6AH–15362–10	PLUG, OIL LEVEL TAMPAO DO NIVEL DE OLEO	1					
11	90119–08103	BOLT, WITH WASHER PARAFUSO COM ARRUELA	6					
12	97575–08530	BOLT, WITH WASHER PARAFUSO COM ARRUELA	2					
13	6AH–45126–00	PLATE, SEAL DAMPER PLACA DO AMORTIZADOR	1					
14	6AH–45115–00	GASKET, UPPER CASING GAXETA	1					
15	6AH–45135–00	PIPE TUBO	1					

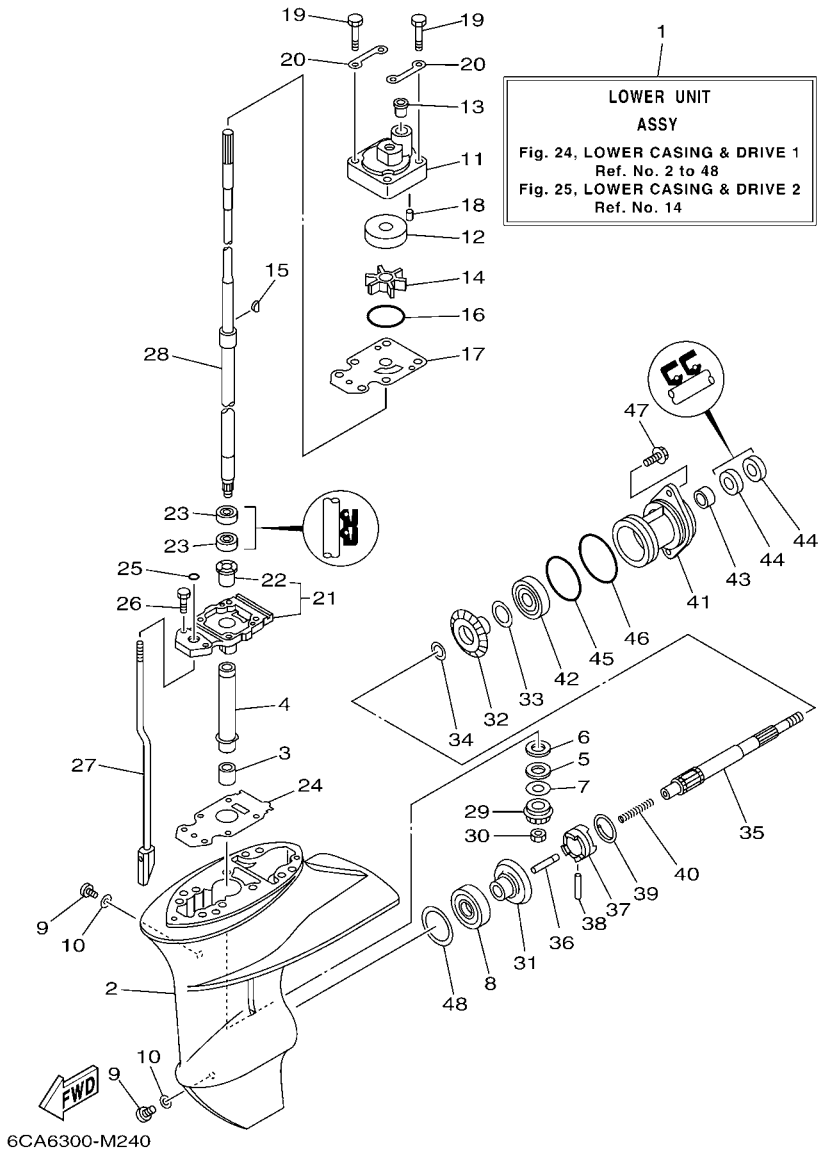

FIG. 24 LOWER CASING & DRIVE 1 CARCACA INF. E TRANSMISSAO 1

REF. NO.	PART NO. No. PEÇA	DESCRIPTION DESCRIÇÃO	6BY9					REMARKS OBSERVAÇÕES
1	6AH–45300–00–4D	LOWER UNIT ASSY UNIDADE DA RABETA INFERIOR CJ.	1					S(17.1") S(17.1")
2	6AH–45311–00–4D	CASING, LOWER RABETA INFERIOR	1					
3	93315–314V8	BEARING ROLAMENTO	1					
4	63V–45536–00	SLEEVE, DRIVE SHAFT PROTETOR DO EIXO DE DIRECIONAL	1					
5	90209–14011	WASHER ARRUELA	1					
6	90201–15017	WASHER, PLATE ARRUELA PLANA	1					
7	6E8–45587–10	SHIM (T:1.13MM) CALCO (T:1.13MM)	1					UR UR
	6E8–45587–30	SHIM (T:1.20MM) CALCO (T:1.20MM)	1					UR UR
8	93332–00005	BEARING ROLAMENTO	1					
9	90340–08002	PLUG, STRAIGHT SCREW TAMPAO DO DRENO	2					
10	90430–08020	GASKET GAXETA	2					
11	6AH–44311–00	HOUSING, WATER PUMP ALOJAMENTO DA BOMBA D'AGUA	1					
12	63V–44322–00	INSERT, CARTRIDGE INSERTO DA BOMBA D'AGUA	1					
13	6L2–44367–00	DAMPER, WATER SEAL 3 AMORTIZADOR DE BORRACHA 3	1					
14	63V–44352–01	IMPELLER IMPULSOR	1					
15	664–44338–00	KEY, WOODRUFF CHAVETA DE ACO	1					
16	93210–49046	O-RING ANEL DE BORRACHA	1					
17	68T–44323–00	OUTER PLATE, CARTRIDGE PLACA DA EXTERNA DA BOMBA	1					
18	93604–12M07	PIN, DOWEL PINO GUIA	2					
19	97095–08045	BOLT PARAFUSO	4					
20	63V–44328–01	PLATE PLACA	2					
21	69G–45331–01–CA	HOUSING, BEARING ALOJAMENTO DO ROLAMENTO	1					
22	626–45316–09	.BUSHING, DRIVE SHAFT .BUCHA DO EIXO DE DIRECAO	1					
23	93101–20001	OIL SEAL RETENTOR DE OLEO	2					
24	69G–45315–A0	PACKING, LOWER CASING GAXETA DA RABETA INFERIOR	1					
25	93210–06ME6	O-RING ANEL DE BORRACHA	1					
26	97080–08025	BOLT PARAFUSO	2					

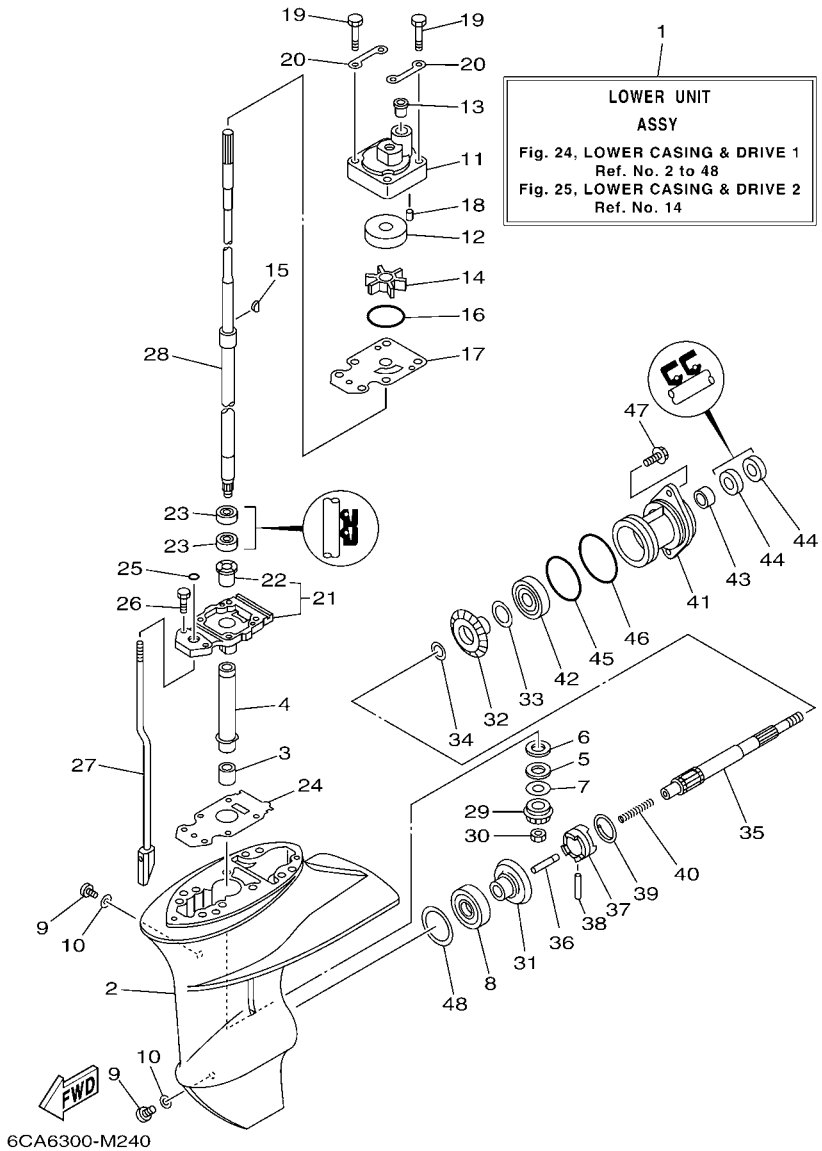

FIG. 24 LOWER CASING & DRIVE 1 CARCACA INF. E TRANSMISSAO 1

REF. NO.	PART NO. No. PEÇA	DESCRIPTION DESCRIÇÃO	6BY9					REMARKS OBSERVAÇÕES
27	6AH–44150–00	SHIFT CAM ASSY CAME DE MUDANCA CONJ.	1					S(17.1") S(17.1")
28	6AH–45510–00	DRIVE SHAFT ASSY EIXO DE DIRECIONAL COMPL.	1					S(17.1") S(17.1")
29	63V–45551–00	PINION (13T) PINHAO (13D)	1					
30	90179–08M06	NUT PORCA	1					
31	6E7–45560–01	GEAR 1 (27T) ENGRENAGEM 1 (27D)	1					
32	6E7–45571–00	GEAR 2 (27T) ENGRENAGEM 2 (27D)	1					
33	626–45577–00	SHIM (T:0.10MM) CALCO (T:0.10MM)	1					UR UR
	626–45577–10	SHIM (T:0.20MM) CALCO (T:0.20MM)	1					UR UR
	626–45577–20	SHIM (T:0.30MM) CALCO (T:0.30MM)	1					UR UR
	626–45577–30	SHIM (T:0.40MM) CALCO (T:0.40MM)	1					UR UR
	626–45577–40	SHIM (T:0.50MM) CALCO (T:0.50MM)	1					UR UR
34	90201–17682	WASHER, PLATE ARRUELA PLANA	1					
35	683–45611–00	SHAFT, PROPELLER EIXO DA HELICE	1					
36	650–45635–00	PLUNGER, SHIFT ACIONADOR DE MUDANCA	1					
37	682–45631–00	CLUTCH, DOG ENGATE DA ENGRENAGEM	1					
38	90250–05010	PIN, STRAIGHT PINO DIRECTO	1					
39	648–45633–00	RING, CROSS PIN ANEL DE FIXACAO DO PINHAO	1					
40	90501–150A0	SPRING, COMPRESSION MOLA DE COMPRESSAO	1					
41	683–45361–02–4D	CAP, LOWER CASING CAPA DA RABETA INFERIOR	1					
42	93306–00501	BEARING ROLAMENTO	1					
43	93315–317U2	BEARING ROLAMENTO	1					
44	93101–17054	OIL SEAL RETENTOR DE OLEO	2					
45	93210–57M09	O-RING ANEL DE BORRACHA	1					
46	93210–56M80	O-RING ANEL DE BORRACHA	1					
47	97575–06520	BOLT, WITH WASHER PARAFUSO COM ARRUELA	2					
48	664–45567–01	SHIM (T:0.10MM) CALCO (T:0.10MM)	1					UR UR
	664–45567–10	SHIM (T:0.12MM) CALCO (T:0.12MM)	1					UR UR

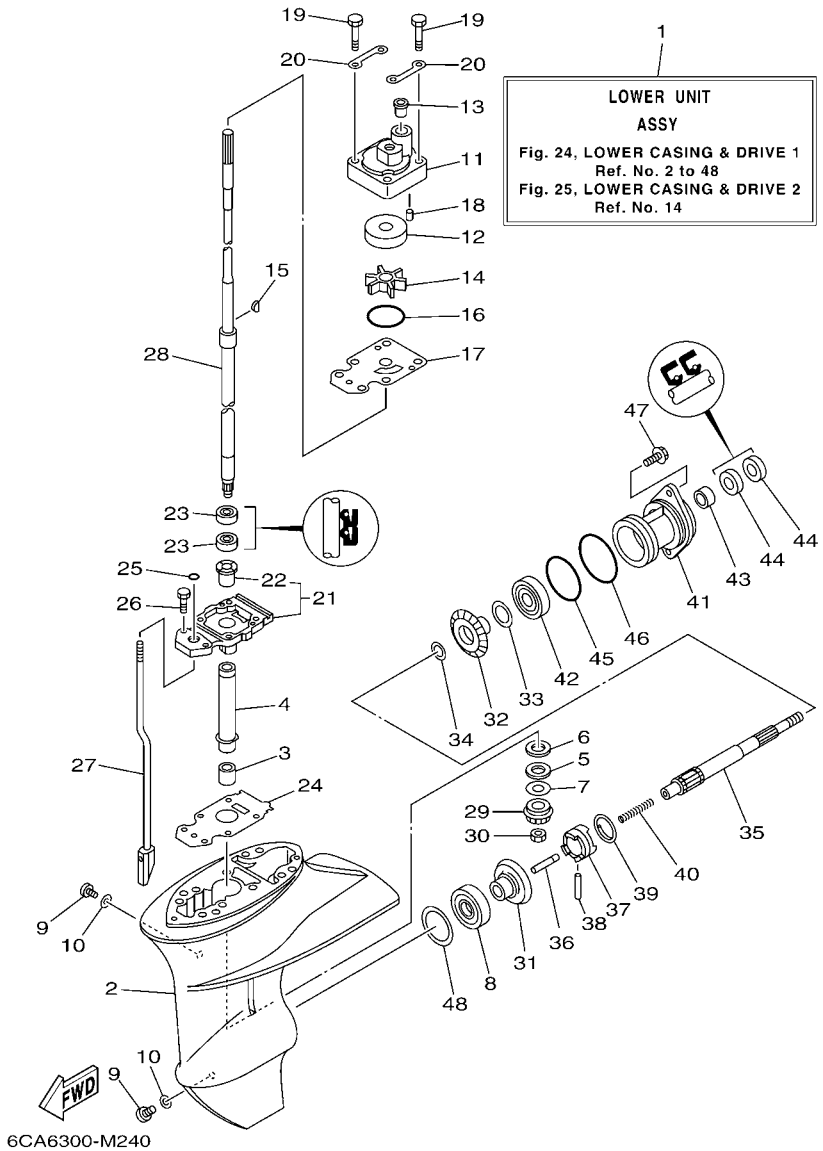

FIG. 24 LOWER CASING & DRIVE 1 CARCACA INF. E TRANSMISSAO 1

REF. NO.	PART NO. No. PEÇA	DESCRIPTION DESCRIÇÃO	6BY9					REMARKS OBSERVAÇÕES
48	664–45567–20	SHIM (T:0.15MM) CALCO (T:0.15MM)	1					UR UR
	664–45567–30	SHIM (T:0.18MM) CALCO (T:0.18MM)	1					UR UR
	664–45567–40	SHIM (T:0.30MM) CALCO (T:0.30MM)	1					UR UR
	664–45567–50	SHIM (T:0.40MM) CALCO (T:0.40MM)	1					UR UR
	664–45567–60	SHIM (T:0.50MM) CALCO (T:0.50MM)	1					UR UR

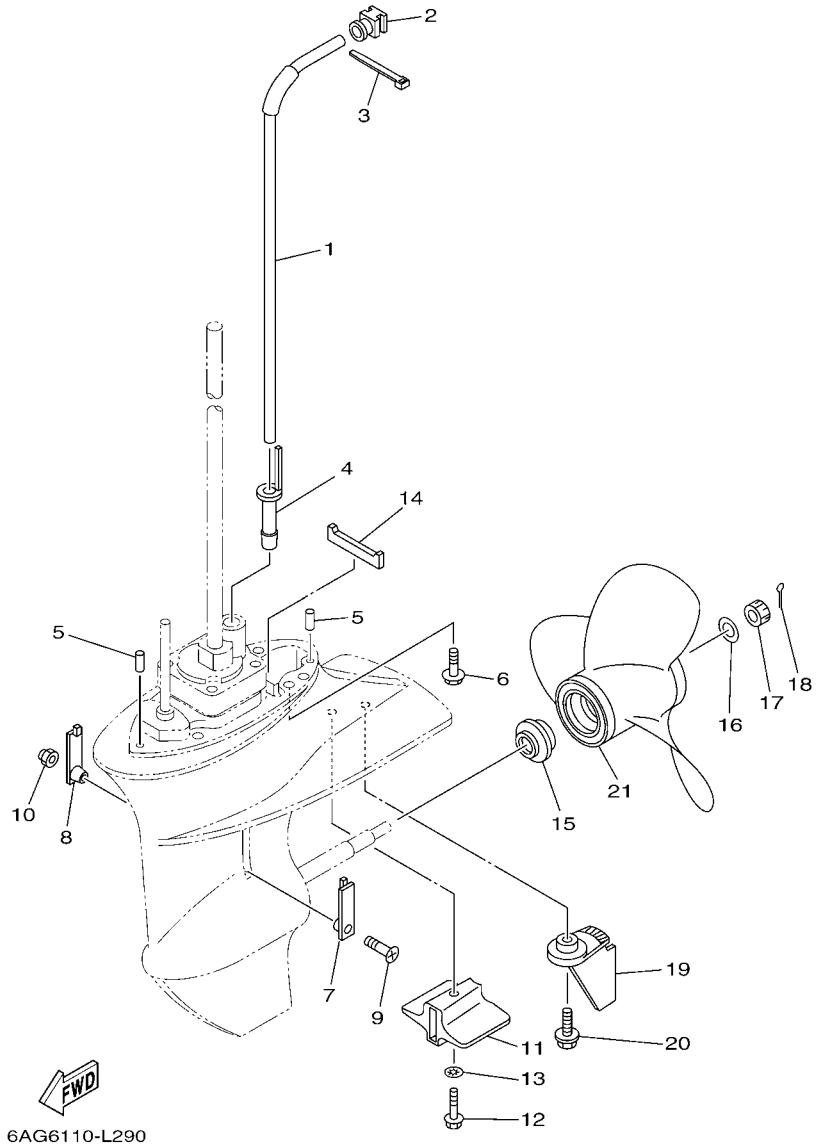

FIG. 25 LOWER CASING & DRIVE 2 CARCACA INF. E TRANSMISSAO 2

REF. NO.	PART NO. No. PEÇA	DESCRIPTION DESCRIÇÃO	6BY9					REMARKS OBSERVAÇÕES
1	6AH–44361–01	TUBE, WATER 1 TUBO DE AGUA 1	1					S(17.1") S(17.1")
2	6AH–44365–00	DAMPER, WATER SEAL 1 AMORTIZADOR DE BORRACHA 1	1					
3	90465–11M10	CLAMP BRACADEIRA	1					
4	6AH–44368–00	RUBBER, WATER SEAL 4 BORRACHA DO TUBO DE AGUA 4.	1					
5	93604–12M07	PIN, DOWEL PINO GUIA	2					
6	97575–08530	BOLT, WITH WASHER PARAFUSO COM ARRUELA	4					
7	6G1–45214–00	COVER, WATER INLET 1 TAMPA DA ENTRADA DE AGUA 1	1					
8	63V–45215–00	COVER, WATER INLET 2 TAMPA DA ENTRADA DE AGUA 2	1					
9	90152–05011	SCREW, COUNTERSUNK PARAFUSO TRAMBULADOR	1					
10	90185–05002	NUT, NYLON PORCA AUTOTRAVANTE	1					
11	6AH–45251–00	ANODE ANODO	1					
12	95895–06035	BOLT, FLANGE PARAFUSO FLANGE	1					
13	92990–06300	WASHER, INTERNAL TOOTH ARRUELA	1					
14	63V–45375–00	DAMPER, SEAL AMORTIZADOR DE VEDACAO	1					
15	6E7–45987–01	SPACER 1 ESPACADOR 1	1					
16	90201–10M01	WASHER, PLATE ARRUELA PLANA	1					
17	90171–10M01	NUT, CASTLE PORCA CASTELO	1					
18	91490–30020	PIN. COTTER CONTRAPINO	1					
19	6AH–45371–A0–4D	TAB-TRIM ESTABILIZADOR DE DIRECAO	1					
20	90119–06M88	BOLT, WITH WASHER PARAFUSO COM ARRUELA	1					
21	63V–45941–10	PROPELLER (3X9-1/4"X12"-J1) HELICE (3X9-1/4"X12"-J1)	1					UR UR
	63V–45943–10	PROPELLER (3X9-1/4"X11"-J1) HELICE (3X9-1/4"X11"-J1)	1					UR UR
	63V–45945–10	PROPELLER (3X9-1/4"X9"-J1) HELICE (3X9-1/4"X9"-J1)	1					UR UR
	63V–45952–10	PROPELLER (3X9-1/4"X10"-J1) HELICE (3X9-1/4"X10"-J1)	1					UR UR
	683–45941–00	PROPELLER (3X9-1/4"X12"-J) HELICE (3X9-1/4"X12"-J)	1					UR UR
	683–45943–00	PROPELLER (3X9-1/4"X10-1/2"-J) HELICE (3X9-1/4"X10-1/2"-J)	1					UR UR
	683–45952–00	PROPELLER (3X9-1/4"X9-3/4"-J) HELICE (3X9-1/4"X9-3/4"-J)	1					UR UR

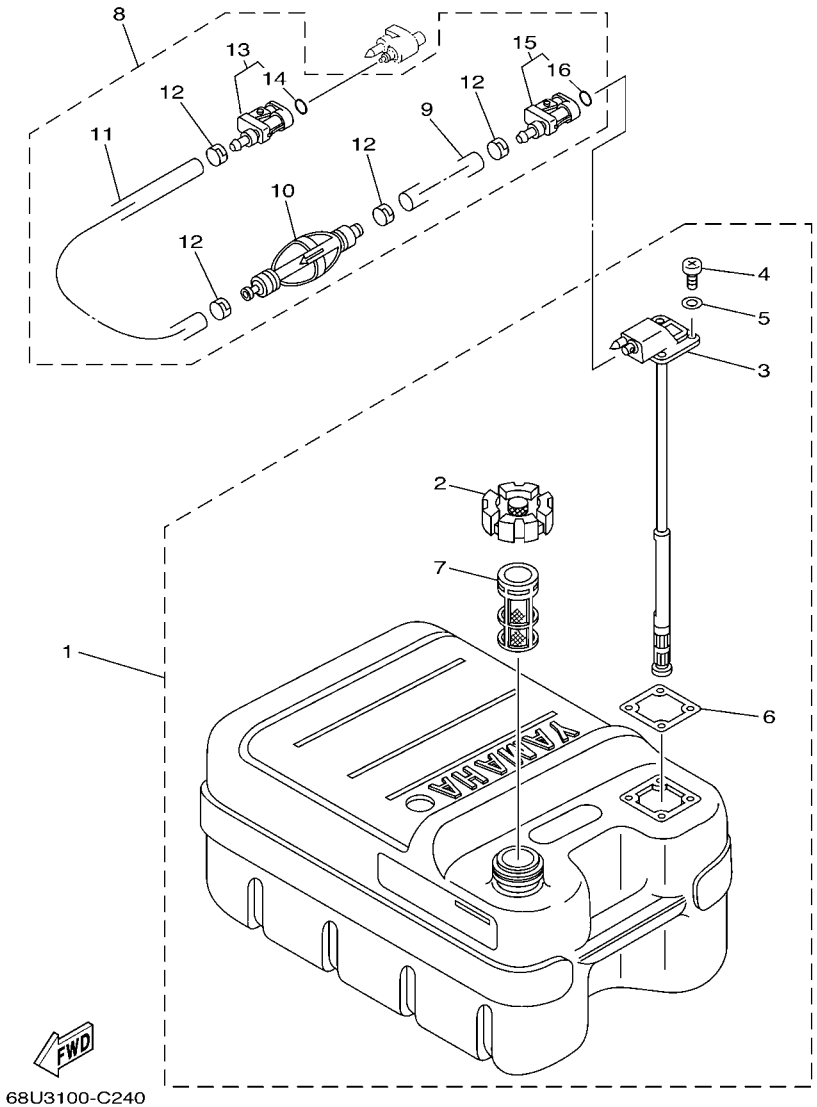

FIG. 26 FUEL TANK — TANQUE DE COMBUSTIVEL

REF. NO.	PART NO. No. PEÇA	DESCRIPTION DESCRIÇÃO	6BY9					REMARKS OBSERVAÇÕES
1	61J–F4201–00	FUEL TANK ASSY TANQUE DE COMBUSTIVEL CONJ.	1					
2	6YJ–24610–01	.CAP ASSY .TAMPA DO TANQUE CJ.	1					
3	6YJ–24260–00	.FUEL METER ASSY .MEDIDOR NIVEL DO COMBUSTIVEL	1					
4	90157–05M19	.SCREW, PAN HEAD .PARAFUSO	4					
5	6Y1–24329–00	.SEAL .GUARNICAO	4					
6	6Y1–24268–00	.GASKET, FUEL METER .GAXETA DO MEDIDOR DO NIVEL	1					
7	6YJ–24167–00	.STRAINER .FILTRO	1					
8	61J–24306–04	FUEL PIPE COMP. 1 TUBO DE COMBUSTIVEL COMP. 1	1					
9	90445–11M06	.HOSE (L2050) .TUBO (L2050)	1					
10	61J–24360–00	.PRIMER PUMP ASSY .BOMBA PRIMARIA CONJ.	1					
11	90445–11M05	.HOSE (L850) .TUBO (L850)	1					
12	650–24351–51	.BAND 1 .BRACADEIRA 1	4					
13	6G1–24305–05	.FUEL PIPE JOINT COMP. 2 .JUNCAO TUBO DE COMBUSTIVEL 2	1					
14	93210–08287	..O-RING ..ANEL DE BORRACHA	1					
15	6Y1–24305–06	.FUEL PIPE JOINT COMP. 2 .JUNCAO TUBO DE COMBUSTIVEL 2	1					
16	93210–08287	..O-RING ..ANEL DE BORRACHA	1					

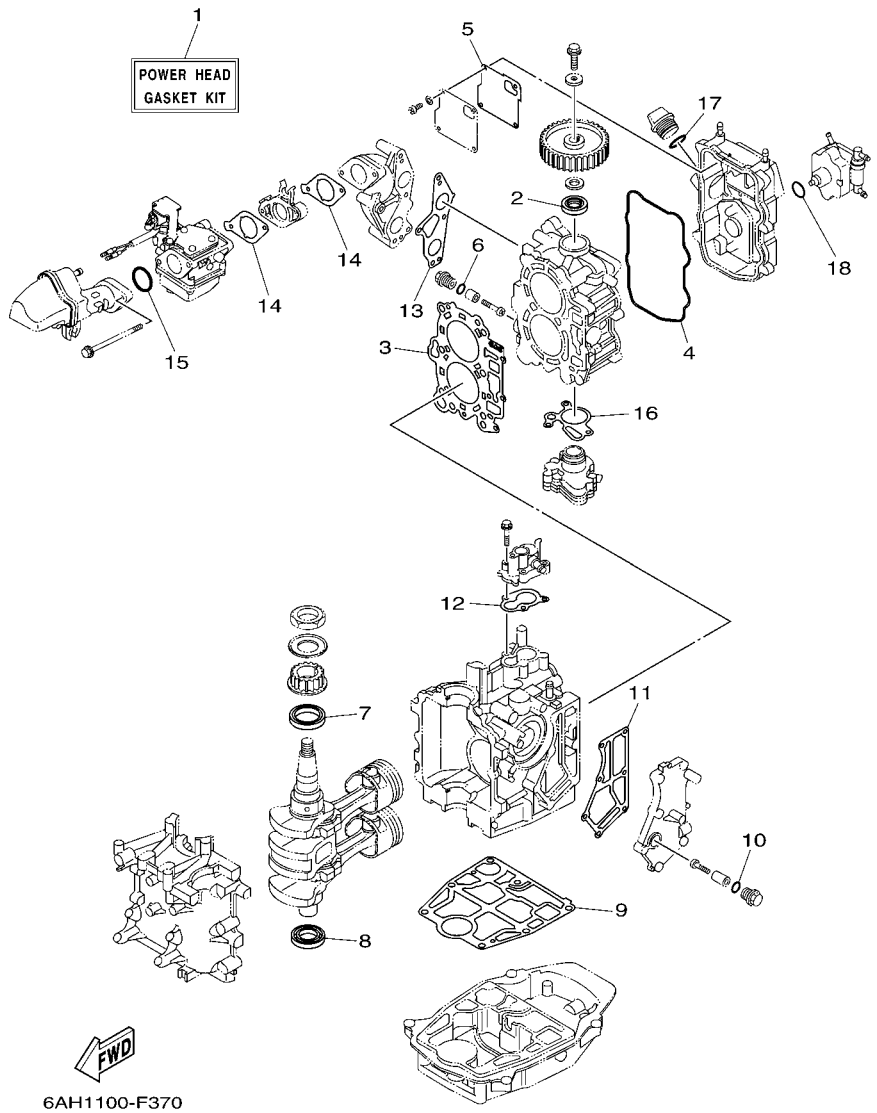

FIG. 27 REPAIR KIT 1 — KIT DE REPARO 1

REF. NO.	PART NO. No. PEÇA	DESCRIPTION DESCRIÇÃO	6BY9					REMARKS OBSERVAÇÕES
1	6AG–W0001–00	POWER HEAD GASKET KIT KIT DE GAXETAS DO CABECOTE	1					
2	93102–22010	.OIL SEAL .RETENTOR DE OLEO	1					
3	6AG–11181–10	.GASKET, CYLINDER HEAD 1 .GAXETA, CABECOTE DO CILINDRO 1	1					
4	6AH–11356–00	.SEAL, CYLINDER 2 .VEDACAO DO CILINDRO 2	1					
5	6AH–11169–00	.GASKET, BREATHER COVER .GAXETA DA TAMPA DO RESPIRO	1					
6	93210–13M63	.O-RING .ANEL DE BORRACHA	2					
7	93102–37004	.OIL SEAL .RETENTOR DE OLEO	1					
8	93102–25014	.OIL SEAL .RETENTOR DE OLEO	1					
9	6AH–11351–10	.GASKET, CYLINDER .GAXETA DO CILINDRO	1					
10	93210–13M63	.O-RING .ANEL DE BORRACHA	1					
11	6AH–41114–00	.GASKET, EXHAUST OUTER COVER .GAXETA TAMPA EXTERNA DO ESCAPE	1					
12	6AH–12414–00	.GASKET, COVER .GAXETA DA TAMPA	1					
13	6AH–13645–00	.GASKET, MANIFOLD 1 .GAXETA DO TUBO MULTIPLO 1	1					
14	6AH–13646–00	.GASKET, MANIFOLD 2 .GAXETA DO TUBO MULTIPLO 2	2					
15	93210–35M86	.O-RING .ANEL DE BORRACHA	1					
16	6AH–13329–10	.GASKET, PUMP COVER .GAXETA DA TAMPA DA BOMBA	1					
17	93210–24M79	.O-RING .ANEL DE BORRACHA	1					
18	93210–20M65	.O-RING .ANEL DE BORRACHA	1					

FIG. 28 REPAIR KIT 2 — KIT DE REPARO 2

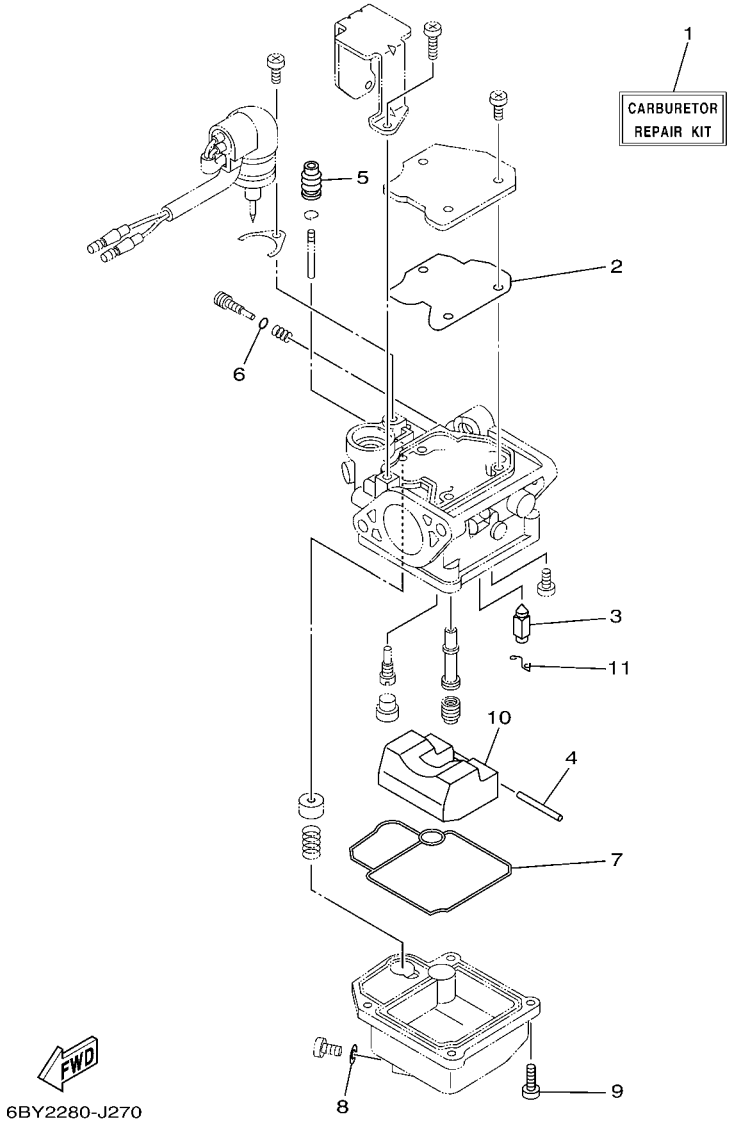

REF. NO.	PART NO. No. PEÇA	DESCRIPTION DESCRIÇÃO	6BY9					REMARKS OBSERVAÇÕES
1	6AH–W0093–01	CARBURETOR REPAIR KIT JOGO DE REPARO DO CARBURADOR	1					
2	65W–14126–10	.GASKET .GAXETA	1					
3	6AH–14546–00	.VALVE, NEEDLE .VALVULA DA AGULHA	1					
4	6H4–14548–00	.PIN, FLOAT ARM .PINO DA BOIA	1					
5	65W–14373–02	.COVER, PLUNGER CAP .CAPA DA HASTE DE ACELERACAO	1					
6	67F–14398–10	.O-RING .ANEL DE BORRACHA	1					
7	6AH–14384–00	.GASKET, FLOAT CHAMBER .GAXETA DA CAMARA DA BOIA	1					
8	65W–14398–00	.GASKET .GAXETA	1					
9	97980–04114	.SCREW, WITH WASHER .PARAFUSO	4					
10	6AH–14985–00	.FLOAT .BOIA	1					
11	633–14159–00	.CLIP .PRESILHA	1					

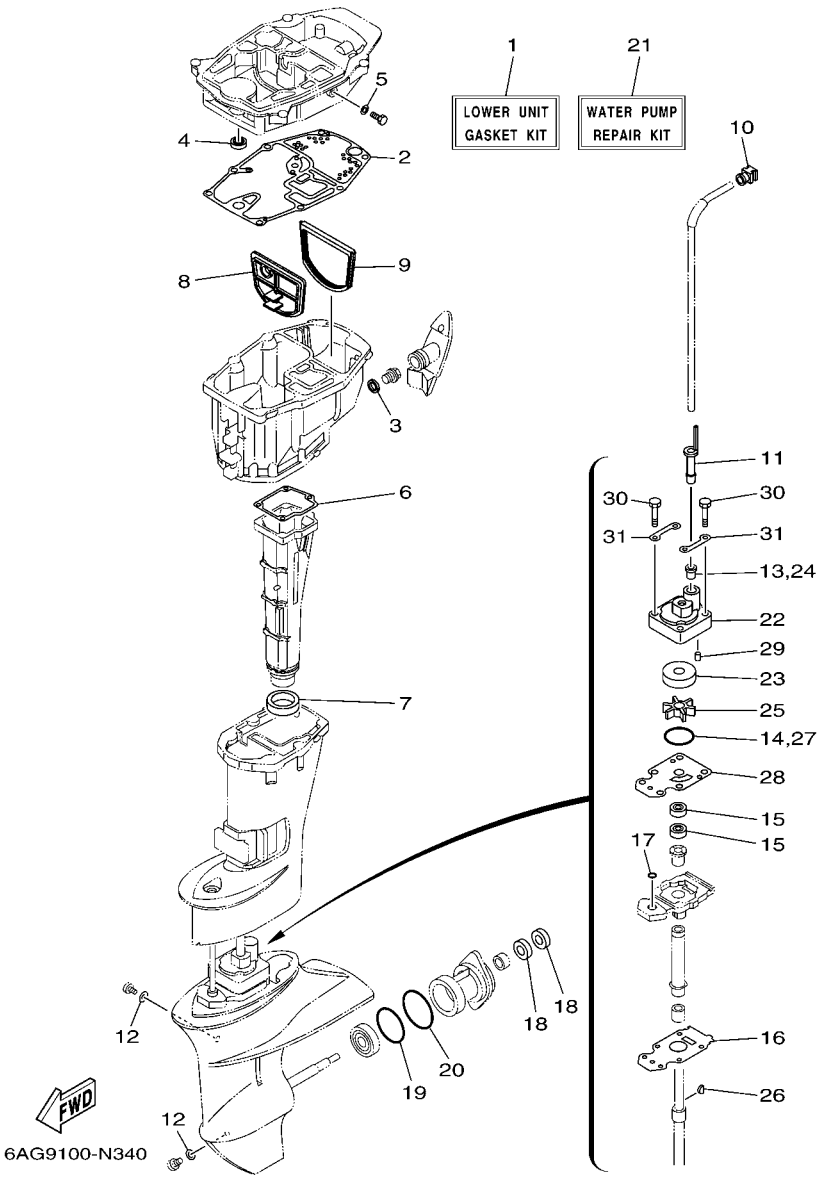

FIG. 29 REPAIR KIT 3 — KIT DE REPARO 3

REF. NO.	PART NO. No. PEÇA	DESCRIPTION DESCRIÇÃO	6BY9					REMARKS OBSERVAÇÕES
1	6AH–W0001–20	LOWER UNIT GASKET KIT KIT DE GAXETAS UNIDADE INF.	1					
2	6AH–15312–10	.GASKET, OIL PAN .GAXETA DA CAPA DO OLEO	1					
3	90430–14M09	.GASKET .GAXETA	1					
4	93101–12M63	.OIL SEAL .RETENTOR DE OLEO	1					
5	90430–08143	.GASKET .GAXETA	1					
6	6AH–41134–00	.GASKET, EXHAUST MANIFOLD .GAXETA DO MULTIPLO DE ESCAPE	1					
7	6AH–41138–00	.SEAL, EXT. 1 .VEDACAO DO ESCAPE 1	1					
8	6AH–45126–00	.PLATE, SEAL DAMPER .PLACA DO AMORTIZADOR	1					
9	6AH–45115–00	.GASKET, UPPER CASING .GAXETA	1					
10	6AH–44365–00	.DAMPER, WATER SEAL 1 .AMORTIZADOR DE BORRACHA 1	1					
11	6AH–44368–00	.RUBBER, WATER SEAL 4 .BORRACHA DO TUBO DE AGUA 4.	1					
12	90430–08020	.GASKET .GAXETA	2					
13	6L2–44367–00	.DAMPER, WATER SEAL 3 .AMORTIZADOR DE BORRACHA 3	1					
14	93210–49046	.O-RING .ANEL DE BORRACHA	1					
15	93101–20001	.OIL SEAL .RETENTOR DE OLEO	2					
16	69G–45315–A0	.PACKING, LOWER CASING .GAXETA DA RABETA INFERIOR	1					
17	93210–06ME6	.O-RING .ANEL DE BORRACHA	1					
18	93101–17054	.OIL SEAL .RETENTOR DE OLEO	2					
19	93210–57M09	.O-RING .ANEL DE BORRACHA	1					
20	93210–56M80	.O-RING .ANEL DE BORRACHA	1					
21	6AH–W0078–00	WATER PUMP REPAIR KIT JOGO DE REPARO DA BOMBA D'AGUA	1					
22	6AH–44311–00	.HOUSING, WATER PUMP .ALOJAMENTO DA BOMBA D'AGUA	1					
23	63V–44322–00	.INSERT, CARTRIDGE .INSERTO DA BOMBA D'AGUA	1					
24	6L2–44367–00	.DAMPER, WATER SEAL 3 .AMORTIZADOR DE BORRACHA 3	1					
25	63V–44352–01	.IMPELLER .IMPULSOR	1					
26	664–44338–00	.KEY, WOODRUFF .CHAVETA DE ACO	1					
27	93210–49046	.O-RING .ANEL DE BORRACHA	1					

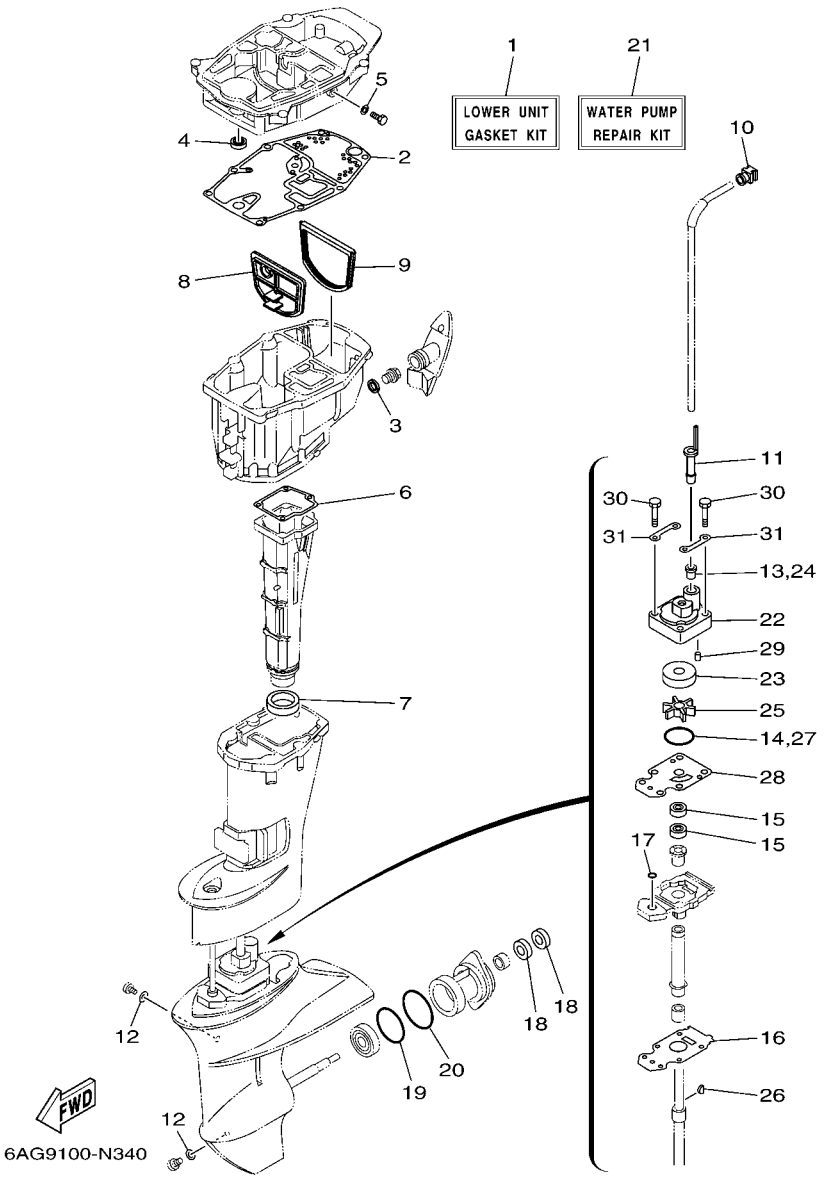

FIG. 29 REPAIR KIT 3 — KIT DE REPARO 3

REF. NO.	PART NO. No. PEÇA	DESCRIPTION DESCRIÇÃO	6BY9					REMARKS OBSERVAÇÕES
28	68T–44323–00	.OUTER PLATE, CARTRIDGE .PLACA DA EXTERNA DA BOMBA	1					
29	93604–12M07	.PIN, DOWEL .PINO GUIA	2					
30	97095–08045	.BOLT .PARAFUSO	4					
31	63V–44328–01	.PLATE .PLACA	2					

NUMERICAL INDEX
ÍNDICE NUMÉRICO

PART NO. No. PEÇA	REF. NO.
6AH–11111–10–1S	5 – 2
6AH–11133–10	5 – 3
6AH–11168–00	5 – 13
6AH–11169–00	5 – 14
	27 – 5
6AG–11181–10	5 – 4
	27 – 3
6AH–11191–00–1S	5 – 8
6G8–11197–A0	3 – 13
	5 – 19
6E5–11325–00	1 – 5
	3 – 26
6G8–11325–00	1 – 1
	1 – 4
	1 – 7
	3 – 11
	3 – 22
	5 – 17
6AH–11351–10	3 – 7
	27 – 9
6AH–11356–00	5 – 10
	27 – 4
676–11372–00	3 – 10
6AH–11372–00	5 – 9
6AH–11411–00	4 – 1
6AH–11416–00	4 – 2
6AH–11416–10	4 – 2
6AH–11416–20	4 – 2
6AH–11536–00	9 – 6
6AH–11537–00	9 – 2
6AH–11557–00	9 – 7
6AH–11603–00	4 – 6
6AH–11604–00	4 – 6
6AH–11605–00	4 – 6
6AH–11631–00	4 – 5
137–11633–10	4 – 7
6AH–11635–00	4 – 5
6AH–11636–00	4 – 5
6AH–11650–10	4 – 3
6AH–11654–00	4 – 4
6AH–12111–00	6 – 1
3YF–12113–00	6 – 4
62Y–12116–00	6 – 3
30X–12117–00	6 – 5
30X–12118–00	6 – 6
51Y–12119–00	6 – 7
6AH–12121–10	6 – 2
66M–12146–00	6 – 8

PART NO. No. PEÇA	REF. NO.
6AH–12151–00	6 – 13
62Y–12158–00	6 – 15
64J–12159–00	6 – 14
6AH–12170–00	9 – 1
6AH–12279–00	6 – 9
6AH–12411–00	1 – 2
	3 – 17
688–12412–00	3 – 18
6AH–12413–00–1S	3 – 19
6AH–12414–00	1 – 3
	3 – 20
	27 – 12
6AH–12481–00	3 – 24
6AH–12535–00	16 – 28
6DR–12572–00	16 – 24
6R3–12581–00	16 – 25
6R3–12582–00	16 – 26
6R3–12583–00	16 – 27
6C5–12858–00	3 – 29
66M–13131–10	10 – 19
6AH–13300–00	9 – 15
6AH–13329–10	9 – 16
	27 – 16
6AH–13411–00	23 – 7
6AH–13437–70	9 – 19
5GH–13440–50	1 – 6
	3 – 28
6AH–13641–00–94	7 – 1
6AH–13645–00	7 – 2
	27 – 13
6AH–13646–00	7 – 8
	27 – 14
65W–14126–10	8 – 4
	28 – 2
633–14159–00	8 – 14
	28 – 11
6AH–14271–00	7 – 9
6AH–14301–H0	8 – 1
6E7–14325–00	10 – 23
6AH–14335–00	8 – 22
65W–14346–00	8 – 33
6AH–14346–00	8 – 31
6AH–14371–00	8 – 23
65W–14373–02	8 – 17
	28 – 5
6AH–14379–00	8 – 18
6AH–14380–21	8 – 29
6AH–14384–00	8 – 24

PART NO. No. PEÇA	REF. NO.
6AH–14384–00	28 – 7
65W–14398–00	8 – 26
	28 – 8
67F–14398–10	8 – 20
	28 – 6
65W–1439G–00	8 – 34
6AH–14427–70	11 – 30
6AH–14440–00	7 – 10
6AH–14497–00	19 – 30
63V–14523–00	8 – 9
6AH–14546–00	8 – 13
	28 – 3
6H4–14548–00	8 – 16
	28 – 4
67C–14555–00	8 – 21
67C–14567–00	8 – 32
6AH–14571–00	19 – 25
65W–14572–00	8 – 3
6AH–14711–00–CA	22 – 8
67C–14923–00	8 – 19
676–14943–33	8 – 11
6AH–14947–00	8 – 10
6AH–14948–06	8 – 6
679–14966–00	8 – 7
6AH–14980–70	8 – 25
6AH–14985–00	8 – 12
	28 – 10
65W–14992–00	8 – 27
6AH–15100–00	3 – 2
6AH–15311–00–CA	23 – 1
6AH–15312–10	23 – 2
	29 – 2
6AH–15316–00	23 – 4
6AH–15362–10	23 – 10
6G8–15363–00	5 – 21
6AH–15373–00	7 – 13
63V–15705–01	11 – 9
6AH–15710–01	11 – 1
6AH–15711–00	11 – 2
63V–15713–00	11 – 7
63V–15714–00	11 – 5
68T–15716–00	11 – 8
66T–15731–00	11 – 24
66T–15734–00	11 – 20
6AH–15741–10	11 – 6
689–15755–01	11 – 15
6AH–15762–01	11 – 28
67D–15764–00	11 – 3

PART NO. No. PEÇA	REF. NO.
68T–15764–00	11 – 14
63V–15767–01	11 – 10
6AH–15770–00	11 – 23
6AH–15774–00	16 – 45
6F5–15779–02	11 – 17
6AH–15782–00	11 – 21
68T–15784–00	11 – 11
6A0–15789–00	11 – 18
63V–15793–00	11 – 12
68T–15793–00	11 – 13
6AH–15793–00	11 – 22
66T–15794–00	11 – 19
6AH–15795–00	11 – 4
6YJ–24167–00	26 – 7
6YJ–24260–00	26 – 3
6Y1–24268–00	26 – 6
6G1–24304–02	10 – 1
6G1–24305–05	26 – 13
6Y1–24305–06	26 – 15
61J–24306–04	26 – 8
6AH–24311–00	10 – 4
6AH–24312–00	10 – 12
6AH–24313–00	10 – 30
6AH–24314–01	16 – 21
6AH–24316–00	11 – 29
6AH–24321–00	10 – 32
6AH–24322–00	10 – 33
61N–24329–00	10 – 2
6Y1–24329–00	26 – 5
650–24351–51	26 – 12
61J–24360–00	26 – 10
66M–24374–00	10 – 25
650–24378–00	3 – 9
688–24378–00	10 – 38
6C5–24378–00	10 – 39
6AH–24410–70	10 – 14
66M–24411–11	10 – 17
6AH–24413–70	10 – 15
6A0–24421–01	10 – 16
66M–24423–00	10 – 18
66M–24444–00	10 – 21
66M–24454–00	10 – 20
66M–24471–01	10 – 22
61N–24521–00	10 – 6
61N–24560–10	10 – 5
61N–24563–10	1 – 9
	10 – 7
6AH–24566–00	10 – 9

PART NO. No. PEÇA	REF. NO.
6YJ–24610–01	26 – 2
6AH–26288–00	17 – 4
6AH–26311–00	17 – 17
6AH–26326–00	16 – 15
6AH–2634E–00	17 – 21
6AH–26364–00	19 – 4
62Y–28100–00	10 – 41
6AH–41113–00–1S	3 – 8
6AH–41114–00	3 – 15
	27 – 11
6AH–41134–00	22 – 7
	29 – 6
6AH–41137–00–CA	22 – 1
6AH–41138–00	22 – 10
	29 – 7
6AH–41211–00	19 – 20
6J8–41262–00	19 – 19
65W–41283–00	19 – 18
6AH–41638–00	19 – 16
6G1–41662–01–94	19 – 5
6AH–42101–02–4D	17 – 2
66M–42119–01	17 – 5
65W–42125–00	17 – 11
6G1–42126–00	17 – 10
6AH–42131–00–4D	17 – 27
6J0–42137–10	17 – 13
65W–42138–00	17 – 7
65W–42159–00	17 – 9
62Y–42171–00	19 – 27
67D–42177–00	17 – 6
6AH–42508–01	18 – 1
6AH–42510–00–4D	21 – 1
68T–42525–01	18 – 2
6AH–42527–00	18 – 15
65W–42528–00	18 – 8
6AH–42532–A0	17 – 29
6AH–42551–00	17 – 22
68T–42561–00	18 – 6
67C–42562–00	18 – 4
6AH–42610–73	2 – 1
6AH–42613–A0	2 – 3
6AH–42615–00	2 – 7
6AH–42617–00	9 – 13
6AH–4261A–01	2 – 2
6AH–42649–00	2 – 10
6AH–42651–00	2 – 5
60R–42652–00	2 – 8
6AH–42656–00	2 – 13

PART NO. No. PEÇA	REF. NO.
6AG–42675–00	2 – 15
6AG–42676–00	2 – 16
6AH–42677–00	2 – 14
6AH–42697–10	2 – 11
6AH–42710–00–4D	16 – 1
6AH–42716–00	16 – 5
65W–42717–00	16 – 32
	22 – 3
6AH–42717–00	16 – 44
6AH–42718–00	16 – 7
6AH–42724–00	16 – 10
6AH–42725–00	16 – 9
6G1–42725–00	13 – 41
65W–42726–00	16 – 18
6AH–42726–00	16 – 20
6AH–42727–00	16 – 17
6AH–42735–00	2 – 12
6AH–42738–00–4D	16 – 6
6AH–42741–00	16 – 39
6AH–42743–00	16 – 33
6AH–42761–A0	16 – 35
6AH–42762–A0	16 – 36
6AH–42794–70	16 – 48
6AH–42801–00	16 – 11
6AH–43111–00–4D	20 – 1
6AH–43112–00–4D	20 – 6
66R–43113–00	20 – 13
648–43114–01	20 – 5
	20 – 10
6E7–43116–00	20 – 4
	20 – 9
6E0–43118–01	20 – 2
	20 – 7
69A–43131–00	20 – 11
68T–43155–00	18 – 18
6L2–43160–01	20 – 19
689–43165–00	20 – 20
6AH–43191–10	20 – 28
6AH–43311–00–4D	20 – 23
6AH–43350–00	20 – 32
68T–43611–00	20 – 37
6AH–43614–00	20 – 34
6AH–43615–00	20 – 36
6DR–43616–00	20 – 25
6AH–43617–00	20 – 30
6AH–43627–00	20 – 42
6DR–43631–00	20 – 24
689–43633–00	18 – 7

NUMERICAL INDEX
ÍNDICE NUMÉRICO

PART NO. No. PEÇA	REF. NO.
6DR–43641–00	20 – 27
6AH–43646–10	20 – 26
68T–43659–00	20 – 40
6AH–44111–00	17 – 32
66R–44114–00	19 – 11
65W–44116–00	19 – 10
6AH–44121–01	19 – 3
6AH–44123–00	19 – 1
6AH–44124–00	17 – 36
6AH–44125–00	19 – 8
6AH–44143–00	19 – 13
6AH–44150–00	24 – 27
6AH–44167–10	19 – 26
6X4–44188–00	17 – 14
6X3–44191–00	17 – 39
6AH–44311–00	24 – 11
	29 – 22
63V–44322–00	24 – 12
	29 – 23
68T–44323–00	24 – 17
	29 – 28
63V–44328–01	24 – 20
	29 – 31
664–44338–00	24 – 15
	29 – 26
63V–44352–01	24 – 14
	29 – 25
6AH–44361–01	25 – 1
6AH–44365–00	25 – 2
	29 – 10
6L2–44367–00	24 – 13
	29 – 13
	29 – 24
6AH–44368–00	25 – 4
	29 – 11
6BL–44391–00	16 – 14
6AH–44514–00	21 – 8
6AH–44526–00	21 – 9
6AH–44551–A0–4D	21 – 12
6AH–44554–00	17 – 18
6AH–44555–00	21 – 14
6AH–44557–00	21 – 13
6AH–44574–00	21 – 15
6AH–45111–00–4D	22 – 11
6AH–45115–00	23 – 14
	29 – 9
6AH–45126–00	23 – 13
	29 – 8

PART NO. No. PEÇA	REF. NO.
6AH–45135–00	23 – 15
6G1–45214–00	25 – 7
63V–45215–00	25 – 8
6AH–45251–00	1 – 13
	25 – 11
6AH–45300–00–4D	24 – 1
6AH–45311–00–4D	24 – 2
69G–45315–A0	24 – 24
	29 – 16
626–45316–09	24 – 22
68T–45321–00	22 – 16
69G–45331–01–CA	24 – 21
683–45361–02–4D	24 – 41
6AH–45371–A0–4D	25 – 19
63V–45375–00	25 – 14
6AH–45510–00	24 – 28
63V–45536–00	24 – 4
63V–45551–00	24 – 29
6E7–45560–01	24 – 31
664–45567–01	24 – 48
664–45567–10	24 – 48
664–45567–20	24 – 48
664–45567–30	24 – 48
664–45567–40	24 – 48
664–45567–50	24 – 48
664–45567–60	24 – 48
6E7–45571–00	24 – 32
626–45577–00	24 – 33
626–45577–10	24 – 33
626–45577–20	24 – 33
626–45577–30	24 – 33
626–45577–40	24 – 33
6E8–45587–10	24 – 7
6E8–45587–30	24 – 7
683–45611–00	24 – 35
682–45631–00	24 – 37
648–45633–00	24 – 39
650–45635–00	24 – 36
683–45941–00	25 – 21
63V–45941–10	25 – 21
683–45943–00	25 – 21
63V–45943–10	25 – 21
63V–45945–10	25 – 21
683–45952–00	25 – 21
63V–45952–10	25 – 21
6E7–45987–01	25 – 15
6AH–46241–00	9 – 10
6AH–46297–00	9 – 11

PART NO. No. PEÇA	REF. NO.
6AH–81948–00	13 – 6
6AH–81949–00	14 – 12
6AH–81960–00	14 – 16
6AH–81994–70	9 – 20
6AH–81995–70	11 – 31
703–82119–00	12 – 4
	14 – 17
6AH–82127–00	21 – 20
67F–82151–00	14 – 13
67F–8215B–00	14 – 14
67F–82361–00	13 – 16
6AH–82370–00	13 – 19
6AH–82388–00	13 – 29
6AH–82389–00	13 – 43
6AH–82398–00	14 – 4
64J–82504–00	13 – 24
6AH–82522–00	13 – 11
6AH–82553–10	13 – 45
6AH–82554–00	13 – 35
682–82556–00	17 – 41
6AH–82560–00	13 – 31
6AH–82575–00	17 – 40
689–8257Y–00	17 – 42
6AH–82588–00	13 – 32
6AH–8259M–11	15 – 1
6H4–83589–00	13 – 26
62Y–84301–00	13 – 25
68F–85119–00	16 – 2
67C–85415–00	13 – 46
6AH–85510–00	12 – 2
6AH–8552A–00	15 – 3
6AH–8552E–00	15 – 4
6AH–85537–00	15 – 5
6AH–85540–00	13 – 1
6AH–85542–00	13 – 22
6AH–85547–00	15 – 7
6AH–85550–00	12 – 1
6F5–85570–13	13 – 14
6AH–85580–00	12 – 3
4VW–F111M–04	16 – 49
61J–F4201–00	26 – 1
6AG–W0001–00	27 – 1
6AH–W0001–20	29 – 1
6AH–W0078–00	1 – 14
	29 – 21
6AH–W0084–03–4D	17 – 1
6AH–W0093–01	28 – 1
6AH–W009A–01–1S	5 – 1

PART NO. No. PEÇA	REF. NO.
6AH–W009B–01–1S	3 – 1
90101–06032	10 – 26
90101–06M18	20 – 16
90101–08022	18 – 16
90105–06035	9 – 17
90105–081A7	9 – 3
90105–09006	5 – 6
90109–06M82	16 – 8
90109–06M84	20 – 43
90109–06M86	13 – 30
	13 – 44
	16 – 34
	16 – 46
	17 – 3
90109–06MA1	7 – 14
90111–06072	17 – 30
90111–08055	10 – 11
90116–10033	21 – 7
90119–05018	18 – 3
90119–06M05	17 – 33
90119–06M35	13 – 8
90119–06M88	25 – 20
90119–06MA3	3 – 16
	3 – 21
	5 – 7
90119–08093	3 – 4
90119–08094	21 – 11
90119–08103	23 – 11
90119–08M45	21 – 16
90119–08M46	21 – 17
90152–05011	17 – 8
	25 – 9
90157–05M19	26 – 4
90167–05017	2 – 4
90167–06002	16 – 29
90170–06015	19 – 14
90170–30003	9 – 8
90171–10M01	25 – 17
90179–08M06	24 – 30
90179–08M34	21 – 18
90179–16M05	12 – 8
90185–05002	25 – 10
90185–10M14	18 – 14
90185–22043	20 – 14
90201–05M04	19 – 28
90201–06106	10 – 28
90201–06M05	13 – 13
90201–06M31	19 – 22

PART NO. No. PEÇA	REF. NO.
90201–08065	18 – 17
90201–08784	9 – 4
90201–106M5	18 – 19
90201–10M01	25 – 16
90201–15017	24 – 6
90201–15423	9 – 5
90201–16M44	12 – 9
90201–17682	24 – 34
90201–39008	17 – 24
90202–10M56	18 – 5
90206–10M24	20 – 44
90206–15M18	17 – 35
90206–39001	17 – 25
90209–10M26	18 – 13
90209–14011	24 – 5
90209–40008	21 – 2
90243–04M01	20 – 3
	20 – 8
90250–05010	24 – 38
90254–03M05	19 – 2
	19 – 9
90266–06M02	2 – 6
90280–03M01	9 – 9
90280–05013	12 – 7
90340–08002	24 – 9
90340–14M06	23 – 5
90381–20001	17 – 26
90386–08004	17 – 16
90386–22MA4	20 – 12
90386–30048	21 – 4
90386–30M60	21 – 6
90386–40001	21 – 3
90386–45001	17 – 23
90387–05053	18 – 9
90387–05054	18 – 10
90387–06138	20 – 38
90387–06139	19 – 21
90387–06176	16 – 4
90387–06289	13 – 9
90387–06M13	20 – 15
90387–06M17	10 – 27
90387–06M70	14 – 19
90387–06M74	13 – 5
90387–06M86	17 – 34
90387–13006	6 – 11
90430–08020	1 – 12
	24 – 10
	29 – 12

PART NO. No. PEÇA	REF. NO.
90430–08143	22 – 5
	29 – 5
90430–14M09	1 – 11
	23 – 6
	29 – 3
90445–09026	10 – 34
90445–09061	10 – 37
90445–09082	10 – 35
90445–11M05	26 – 11
90445–11M06	26 – 9
90445–15003	16 – 22
90446–06M90	11 – 25
90464–06001	14 – 15
90464–07M56	13 – 23
90464–08004	14 – 1
90464–09010	14 – 7
90464–09018	10 – 40
90464–10M32	13 – 40
90464–16003	13 – 42
90464–18246	13 – 38
	14 – 5
90464–20181	15 – 8
90465–08059	5 – 23
90465–08M82	16 – 47
90465–08M83	7 – 5
90465–11M10	3 – 25
	10 – 36
	16 – 16
	16 – 23
	25 – 3
90465–13M18	7 – 16
	13 – 7
	13 – 39
	14 – 6
	15 – 2
90467–09M17	10 – 13
	10 – 31
90468–10005	19 – 29
90468–18008	17 – 38
90480–06M19	9 – 14
90480–10627	9 – 12
90480–10M23	13 – 10
90480–13M24	14 – 20
90480–14M54	22 – 18
90480–16007	16 – 19
90480–16616	7 – 15
90480–19368	15 – 6
90480–21M82	16 – 3

NUMERICAL INDEX
ÍNDICE NUMÉRICO

PART NO. No. PEÇA	REF. NO.
90480–25003	13 – 15
90501–10326	8 – 8
90501–120A5	6 – 12
90501–150A0	24 – 40
90501–23215	17 – 15
90502–10M07	20 – 22
90506–18014	20 – 33
90506–20020	20 – 35
90508–20M44	19 – 17
91490–16010	17 – 12
91490–30020	25 – 18
91690–30008	20 – 21
91690–50014	7 – 4
92903–06600	3 – 6
	23 – 9
92907–04600	5 – 16
92990–06200	17 – 37
92990–06300	25 – 13
92995–05600	18 – 12
	22 – 15
92995–06100	16 – 41
92995–06600	5 – 12
	7 – 7
	11 – 27
	13 – 3
	13 – 18
	13 – 21
	13 – 28
	13 – 34
	13 – 37
	14 – 3
	14 – 23
	15 – 10
	16 – 13
	16 – 31
	16 – 38
	16 – 42
	17 – 20
	19 – 7
	19 – 32
	20 – 17
92995–08600	14 – 9
	14 – 11
93101–12M63	22 – 2
	29 – 4
93101–17054	24 – 44
	29 – 18
93101–20001	24 – 23

PART NO. No. PEÇA	REF. NO.
93101–20001	29 – 15
93102–22010	9 – 18
	27 – 2
93102–25014	4 – 10
	27 – 8
93102–37004	4 – 9
	27 – 7
93210–06ME6	24 – 25
	29 – 17
93210–08287	26 – 14
	26 – 16
93210–13M63	3 – 14
	5 – 20
	27 – 6
	27 – 10
93210–20M65	10 – 29
	27 – 18
93210–24M79	5 – 22
	27 – 17
93210–29M94	21 – 5
93210–32738	1 – 10
	10 – 8
93210–35M86	7 – 11
	27 – 15
93210–49046	24 – 16
	29 – 14
	29 – 27
93210–56M80	24 – 46
	29 – 20
93210–57M09	24 – 45
	29 – 19
93306–00501	24 – 42
93315–314V8	24 – 3
93315–317U2	24 – 43
93332–00005	24 – 8
93430–04M03	20 – 39
93450–17129	4 – 8
93604–12M07	22 – 13
	23 – 3
	24 – 18
	25 – 5
	29 – 29
93606–12019	3 – 3
	5 – 5
93606–19M23	22 – 6
93700–06M03	21 – 19
94702–00418	1 – 8
	5 – 24

PART NO. No. PEÇA	REF. NO.
95380–04600	10 – 24
95380–06600	16 – 43
95380–06700	19 – 15
	20 – 18
95380–08600	10 – 10
95380–10600	21 – 10
95780–06500	14 – 21
95895–06014	19 – 12
95895–06020	10 – 3
95895–06030	12 – 6
95895–06035	25 – 12
95895–06100	7 – 12
97013–06012	6 – 10
97013–06016	23 – 8
97013–06040	3 – 5
97075–06012	16 – 37
97080–08025	24 – 26
97095–05010	22 – 14
97095–05012	12 – 5
97095–05020	18 – 11
97095–06008	22 – 17
97095–06010	16 – 30
97095–06012	7 – 6
	16 – 12
97095–06014	13 – 20
	13 – 33
	14 – 2
	14 – 22
	15 – 9
	17 – 19
	19 – 24
	19 – 31
97095–06016	13 – 36
97095–06020	5 – 11
	11 – 26
	13 – 2
	19 – 6
97095–06025	13 – 17
97095–06030	13 – 4
97095–08014	22 – 4
97095–08016	14 – 10
97095–08025	14 – 8
97095–08045	24 – 19
	29 – 30
97575–06520	24 – 47
97575–06525	22 – 9
97575–08530	22 – 12
	23 – 12

PART NO. No. PEÇA	REF. NO.
97575–08530	25 – 6
97595–05514	2 – 9
97595–06555	7 – 3
	17 – 28
	19 – 23
97780–60520	17 – 31
97880–06010	13 – 12
97885–06012	13 – 27
97885–06030	16 – 40
97980–04108	8 – 30
97980–04110	8 – 5
97980–04114	8 – 28
	28 – 9
97985–06214	15 – 11
98507–04010	5 – 15
98580–04006	8 – 2
98580–04008	8 – 15
98780–04016	3 – 27
98980–05025	3 – 12
	3 – 23
	5 – 18
98980–06030	14 – 18
99080–05600	20 – 29
	20 – 31
	20 – 41

PART NO. No. PEÇA	REF. NO.

PART NO. No. PEÇA	REF. NO.